Instruction book

High speed separator

MAB 104B-14/24

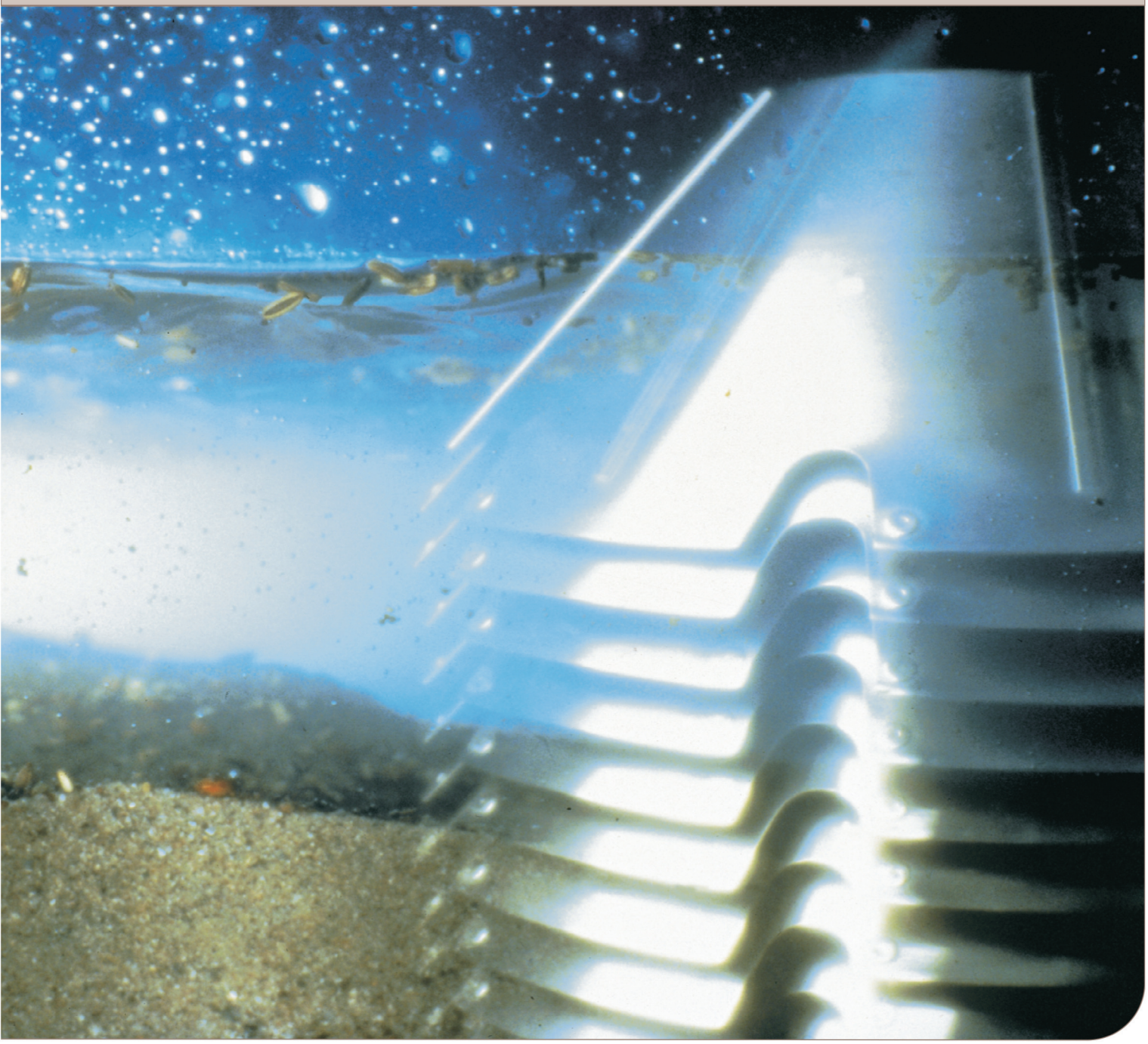

Product No. 881241-08-17/1
Book No. 9027982-02 Rev. 4

Published By:

Alfa Laval Technologies AB
Box 74
SE-221 00 Lund, Sweden
+46 46 366500

The original instructions are in English

© Alfa Laval Corporate AB 13 April 2022

This document and its contents are subject to copyrights and other intellectual property rights owned by Alfa Laval Corporate AB. No part of this document may be copied, re-produced or transmitted in any form or by any means, or for any purpose, without Alfa Laval Corporate AB's prior express written permission. Information and services provided in this document are made as a benefit and service to the user, and no representations or warranties are made about the accuracy or suitability of this information and these services for any purpose.
All rights are reserved.

Contents

1 Read this first 7

2 Safety instructions 9

2.1 Warning signs in text 14

2.2 Recycling Information 15

2.3 Requirements of personnel 16

2.4 Remote start 16

3 Separator basics 17

3.1 Basic principles of separation 18

3.2 Overview 22

3.3 Separating function 23

3.4 Mechanical function 30

3.5 Definitions 34

4 Operating instructions 35

4.1 Operating routine 36

4.2 Cleaning the bowl 44

5 Service instructions 47

5.1 Periodic maintenance 49

5.2 Maintenance Logs 52

5.3 MS - Check points 57

5.4 Cleaning 72

5.5 When changing oil 76

5.6 Common maintenance directions 77

5.7 Lifting instructions 83

6 Dismantling/Assembly 85

6.1 General 86

6.2 Dismantling 87

6.3 Assembly 98
6.4 Feed and discharge pumps 108
6.5 Frame feet 118

7 Trouble-tracing 119
7.1 Trouble tracing procedure 121
7.2 Mechanical function 121
7.3 Purification faults 127
7.4 Clarification faults 129

8 Technical reference 131
8.1 Product description 133
8.2 Technical data 138
8.3 Basic size drawing, separator without pump 141
8.4 Basic size drawing, separator with pump and no heater 142
8.5 Basic size drawing, separator with pump and heater 143
8.6 Connection list, (with pump and no heater / without pump) 144
8.7 Connection list, (pump and heater) 145
8.8 Interface description 146
8.9 Lubricants 149
8.10 Drawings 157
8.11 Electric motor 166
8.12 Storage and installation 167

Read and understand instruction manuals and observe the warnings before installation, operation, service and maintenance.

Not following the instructions can result in serious accidents.

In order to make the information clear only foreseeable conditions have been considered. No warnings are given, therefore, for situations arising from the unintended usage of the machine and its tools.

1 Read this first

This manual is designed for operators and service engineers working with the Alfa Laval separator MAB 104B-14/24.

For information concerning the function of the separator, see “3 Separator basics” on page 17 and “4 Operating instructions” on page 35.

If the separator has been delivered and installed by Alfa Laval as part of a processing system, this manual is a part of the System Manual. In this case, study carefully all the instructions in the System Manual.

In addition to this Instruction book a *Spare Parts Catalogue, SPC* is supplied.

This Instruction book consists of:

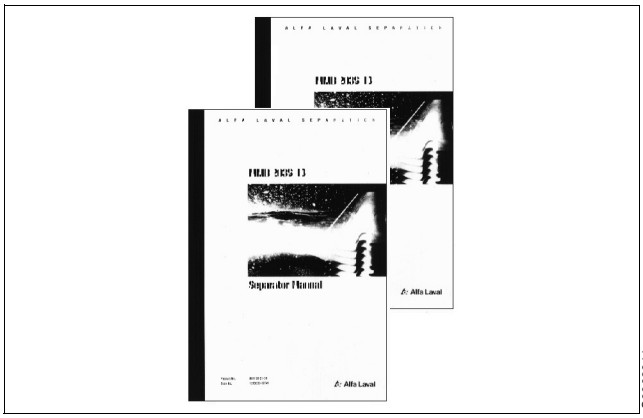

S0068011

Safety instructions

Pay special attention to the safety instructions for the separator. Not following the safety instructions can cause accidents resulting in damage to equipment and serious injury to personnel.

Separator basics

Read this chapter if you are not familiar with this type of separator.

Operating instructions

This chapter contains operating instructions for the separator only.

Service instructions

This chapter gives instructions for daily checks, cleaning, oil changes, servicing and check points.

Dismantling / Assembly

This chapter contains step-by-step instructions for dismantling and assembly of the separator for service and repair.

Trouble-tracing

Refer to this chapter if the separator functions abnormally.

If the separator has been installed as part of a processing system always refer to the Trouble-tracing part of the System Manual first.

Technical reference

This chapter contains technical data concerning the separator and drawings.

Installation

General information on installation planning.

Lifting instruction.

2 Safety instructions

The centrifuge includes parts that rotate at high speed. This means that:

- Kinetic energy is high
- Great forces are generated
- Stopping time is long

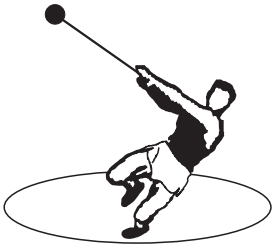

G0010421

Manufacturing tolerances are extremely fine. Rotating parts are carefully balanced to reduce undesired vibrations that can cause a breakdown. Material properties have been considered carefully during design to withstand stress and fatigue.

The separator is designed and supplied for a specific separation duty (type of liquid, rotational speed, temperature, density etc.) and must not be used for any other purpose.

Incorrect operation and maintenance can result in unbalance due to build-up of sediment, reduction of material strength, etc., that subsequently could lead to serious damage and/or injury.

The following basic safety instructions therefore apply:

- **Use the separator only for the purpose and parameter range specified by Alfa Laval.**
- **Strictly follow the instructions for installation, operation and maintenance.**
- **Ensure that personnel are competent and have sufficient knowledge of maintenance and operation, especially concerning emergency stopping procedures.**
- **Use only Alfa Laval genuine spare parts and the special tools supplied.**

S0151211

Disintegration hazards

- When power cables are connected, always check direction of motor rotation. If incorrect, vital rotating parts could unscrew.

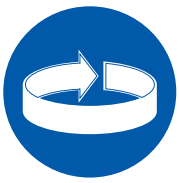

S01512F1

- If excessive vibration occurs, **stop** separator and **keep bowl filled** with liquid during rundown.

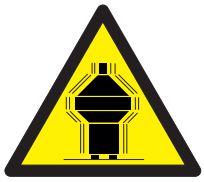

S01512N1

- Use the separator only for the purpose and parameter range specified by Alfa Laval.

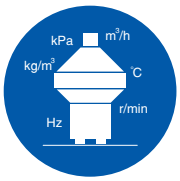

S01512P1

- Check that the gear ratio is correct for power frequency used. If incorrect, subsequent overspeed may result in a serious break down.

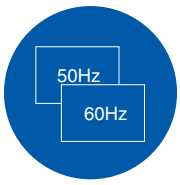

S01512L1

- Welding or heating of parts that rotate can seriously affect material strength.

S01512I1

- Wear on the large lock ring thread must not exceed safety limit. ϕ-mark on lock ring must not pass opposite ϕ-mark by more than specified distance.

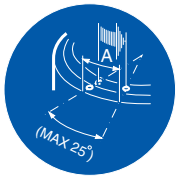

S01512G1

- Inspect regularly for **corrosion** and **erosion** damage. Inspect frequently if process liquid is corrosive or erosive.

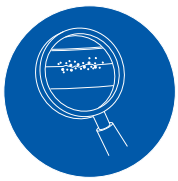

S01512H1

Entrapment hazards

- Do NOT stand on the separator or parts of.

Entrapment hazards

- Make sure that rotating parts have come to a **complete standstill** before starting **any** dismantling work.

  If there is no braking function the run down time can exceed two hours.

S0151201

- To avoid accidental start, switch off and lock power supply before starting **any** dismantling work.

  Assemble the machine **completely** before start. **All** covers and guards must be in place.

S0151261

Electrical hazard

- Follow local regulations for electrical installation and earthing (grounding).
- To avoid accidental start, switch off and lock power supply before starting **any** dismantling work.

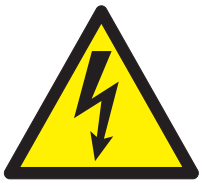

S0151271

Crush hazards

- Use correct lifting tools and follow lifting instructions.

S01512M1

Do **not** work under a hanging load.

S01512Y1

Noise hazards

- Use ear protection in noisy environments.

S0151291

Burn hazards

- Lubrication oil, machine parts and various machine surfaces can be hot and cause burns. Wear protective gloves.

S01512A1

Skin irritation hazards

- When using chemical cleaning agents, make sure you follow the general rules and suppliers recommendation regarding ventilation, personnel protection etc.
- Use of lubricants in various situations.

S01512D1

Cut hazards

- Sharp edges, especially on bowl discs and threads can cause cuts. Wear protective gloves.

S01512B1

Flying objects

- Risk for accidental release of snap rings and springs when dismantling and assembly. Wear safety goggles.

S01512C1

Health hazard

- Risk for unhealthy dust when handling friction blocks/pads. Use a dust mask to make sure not to inhale any dust.

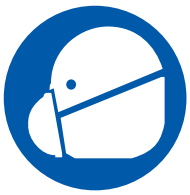

S01512V1

2.1 Warning signs in text

Pay attention to the safety instructions in this manual. Below are definitions of the three grades of warning signs used in the text where there is a risk for injury to personnel.

DANGER

Type of hazard

DANGER indicates an imminently hazardous situation which, if not avoided, will result in death or serious injury.

WARNING

Type of hazard

WARNING indicates a potentially hazardous situation which, if not avoided, could result in death or serious injury.

CAUTION

Type of hazard

CAUTION indicates a potentially hazardous situation which, if not avoided, may result in minor or moderate injury.

NOTE

NOTE indicates a potentially hazardous situation which, if not avoided, may result in property damage.

2.2 Recycling Information

Unpacking

Packing material consists of wood, plastics, cardboard boxes and in some cases metal straps.

- Wood and cardboard boxes can be reused, recycled or used for energy recovery.
- Plastics should be recycled or burnt at a licensed waste incineration plant.
- Metal straps should be sent for material recycling.

Maintenance

During maintenance oil and wear parts in the machine are replaced.

- Oil must be taken care of in agreement with local regulations.
- Rubber and plastics should be burnt at a licensed waste incineration plant. If not available they should be disposed to a suitable licensed land fill site.
- Bearings and other metal parts should be sent to a licensed handler for material recycling.
- Seal rings and friction linings should be disposed to a licensed land fill site. Check your local regulations.
- Worn out or defected electronic parts should be sent to a licensed handler for material recycling.

Scrapping

At the end of use, the equipment must be recycled according to relevant local regulations.

Besides the equipment itself, any hazardous residues from the process liquid must be taken into consideration and dealt with in a proper manner. When in doubt, or in the absence of local regulations, please contact your local Alfa Laval sales company.

2.3 Requirements of personnel

Only **skilled** or **instructed** persons are allowed to operate the machine, e.g. operating and maintenance staff.

- **Skilled person**: A person with technical knowledge or sufficient experience to enable him or her to perceive risks and to avoid hazards which electricity/mechanics can create.
- **Instructed person**: A person adequately advised or supervised by a skilled person to enable him or her to perceive risks and to avoid hazards which electricity/mechanics can create.

In some cases special skilled personnel may need to be hired, like electricians and others. In some of these cases the personnel has to be certified according to local regulations with experience of similar types of work.

2.4 Remote start

If the separator is operated from a remote position, from where it can neither be seen nor heard, the power isolation device shall be equipped with an interlocking device. This is to prevent a remote start command which could result in some liquid being fed to the separator when it is shut down for service.

The first start after the separator has been taken apart or has been standing still for a long time shall always be locally manually supervised.

3 Separator basics

Contents

3.1 Basic principles of separation 18

3.1.1 Factors influencing the separation result 19

3.2 Overview 22

3.3 Separating function 23

3.3.1 Purification 24

3.3.2 Purifier bowl 25

3.3.3 Liquid seal 26

3.3.4 Position of interface - gravity disc 26

3.3.5 Clarification 28

3.4 Mechanical function 30

3.4.1 Main parts 30

3.4.2 Inlet and outlet 31

3.4.3 Mechanical power transmission 32

3.4.4 Brake 32

3.4.5 Sensors and indicators 33

3.5 Definitions 34

3.1 Basic principles of separation

The purpose of separation can be:

- to free a liquid of solid particles,
- to separate two mutually insoluble liquids with different densities while removing any solids presents at the same time,
- to separate and concentrate solid particles from a liquid.

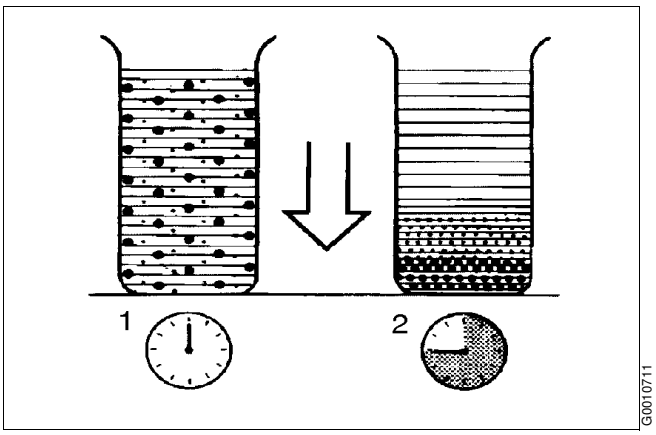

Sedimentation by gravity

Separation by gravity

A liquid mixture in a stationary bowl will clear slowly as the heavy particles in the liquid mixture sink to the bottom under the influence of gravity.

A lighter liquid rises while a heavier liquid and solids sink.

Continuous separation and sedimentation can be achieved in a settling tank having outlets arranged according to the difference in density of the liquids.

Heavier particles in the liquid mixture will settle and form a sediment layer on the tank bottom.

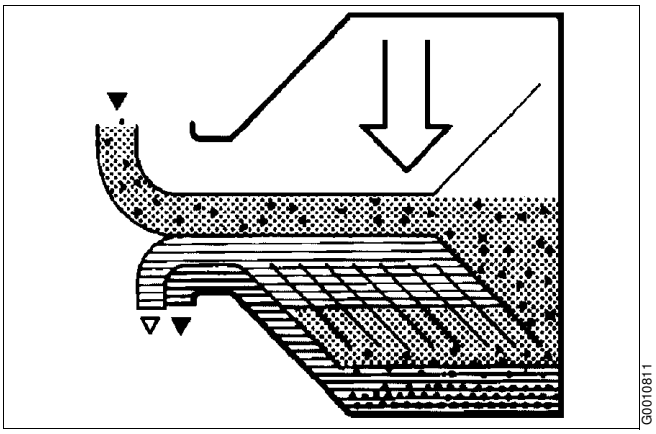

Sedimentation in a settling tank, with outlets making it possible to separate the lighter liquid parts from the heavier

Centrifugal separation

In a rapidly rotating bowl, the force of gravity is replaced by centrifugal force, which can be thousands of times greater.

Separation and sedimentation is continuous and happens very quickly.

The centrifugal force in the separator bowl can achieve in a few seconds what takes many hours in a tank under influence of gravity.

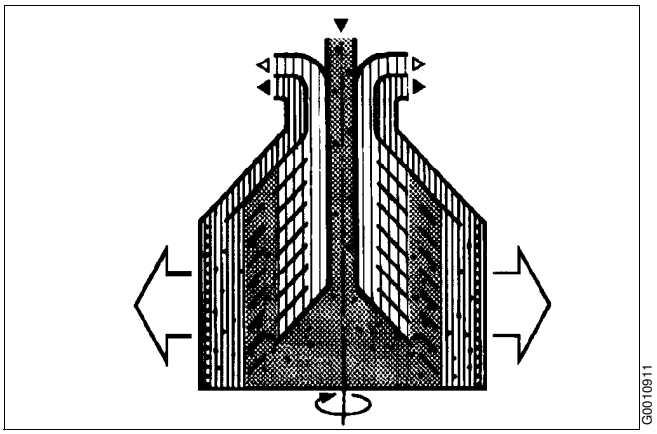

The centrifugal solution

3.1.1 Factors influencing the separation result

Separating temperature

For some types of process liquids (e.g. mineral oils) a high separating temperature will normally increase the separation capacity. The temperature influences oil viscosity and density and should be kept constant throughout the separation.

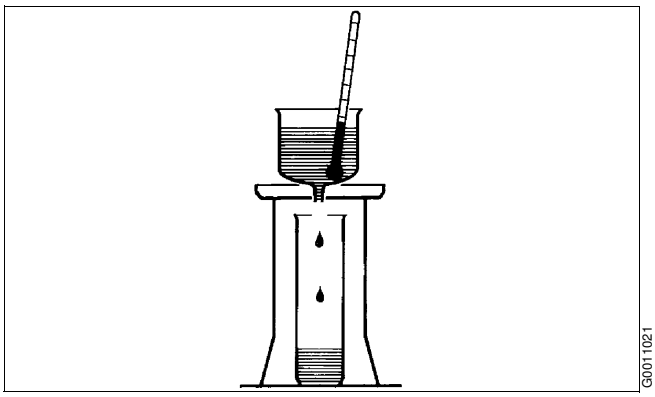

High viscosity (with low temperature)

Viscosity

Low viscosity facilitates separation. Viscosity can be reduced by heating.

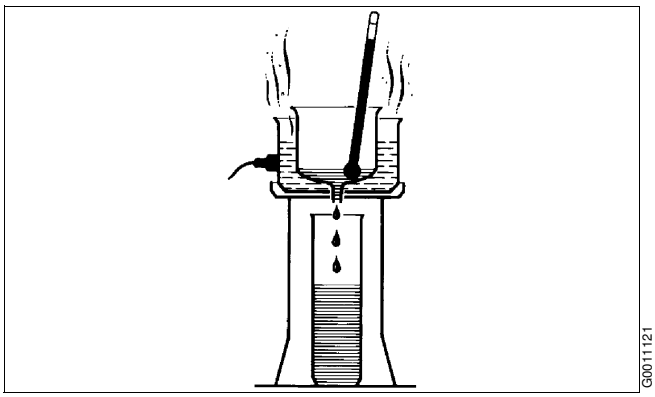

Low viscosity (with high temperature)

Density difference (specific gravity ratio)

The greater the density difference between the two liquids, the easier the separation. The density difference can be increased by heating.

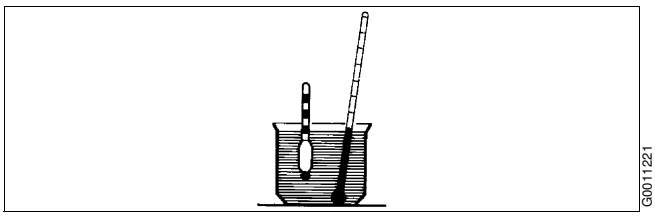

High density (with low temperature)

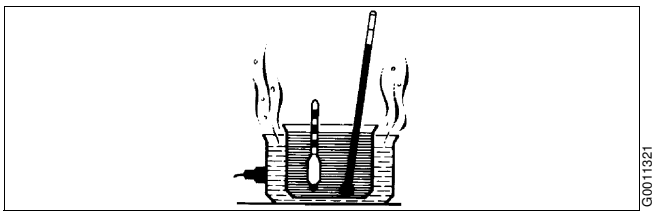

Low density (with high temperature)

Phase proportions

An increased quantity of water in an oil will influence the separating result through the optimum transporting capacity of the disc stack. An increased water content in the oil can be compensated by reducing the throughput in order to restore the optimum separating efficiency.

Size and shape of particles

The round and smooth particle (A) is more easily separated out than the irregular one (B).

Rough treatment, for instance in pumps, may cause a splitting of the particles resulting in slower separation. Larger particles (1) are more easily separated than smaller ones (2) even if they have the same density.

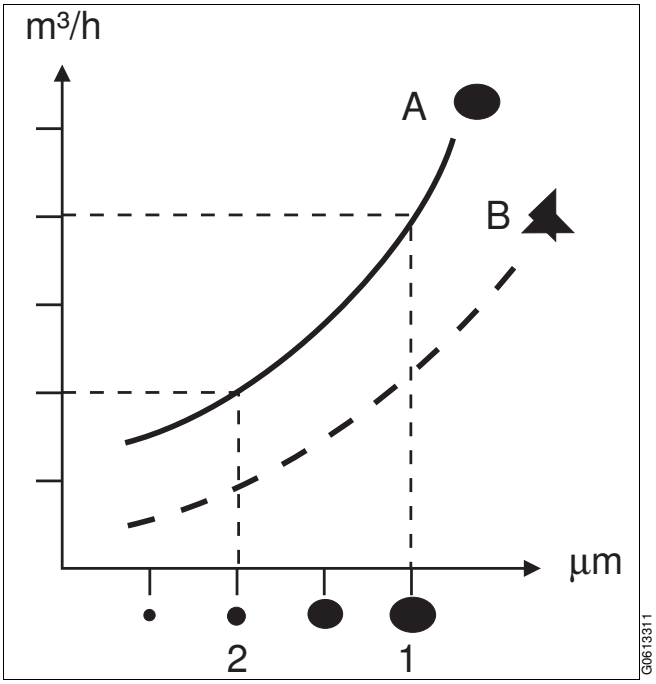

Influence of size and shape

The throughput

The throughput sets the time allowed for the separation of water and sediment from the oil. A better separation result can often be achieved by reducing the throughput, i.e. by increasing the settling time.

Sludge space - sludge content

Sediment will accumulate on the inside periphery of the bowl. When the sludge space is filled up the flow inside the bowl is influenced by the sediment and thereby reducing the separating efficiency. In such cases the time between cleaning should be reduced to suit these conditions.

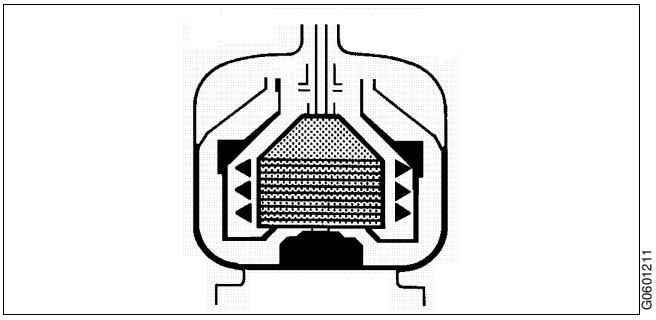

Sludge accumulation

Disc stack

A neglected disc stack containing deformed discs or discs coated with deposits will impair the separating result.

Gravity disc

The position of the interface is adjusted by altering the outlet diameter of the heavy liquid phase, that is by exchanging the gravity disc.

A gravity disc with a larger hole will move the interface towards the bowl periphery, whereas a disc with a smaller hole will place it closer to the bowl centre. For selection of gravity disc see “3.3.4 Position of interface - gravity disc” on page 26.

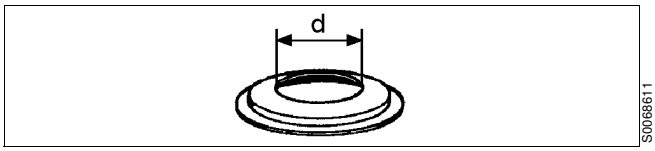

Gravity disc diameter adjust the interface position

3.2 Overview

The separator comprises a processing part and a driving part. It is driven by an electric motor.

Mechanically, the separator machine frame is composed of a bottom part and a collecting cover. The motor is flanged to the frame. The frame feet have vibration damping.

The bottom part of the separator contains the horizontal driving device, driving shaft with coupling, a worm gear and a vertical spindle.

The bottom part also contains an oil bath for the worm gear, a brake and a revolution counter, indicating speed.

The collecting cover contains the processing parts of the separator, the inlet and outlets and piping.

The liquid is cleaned in the separator bowl. This is fitted on the upper part of the vertical spindle and rotates at high speed inside the space formed by the collecting cover.

All connections have standardised numbers. These numbers are used in the connection list and the basic size drawing which can be found in chapter “8 Technical reference” on page 131.

3.3 Separating function

Unseparated process liquid is fed into the bowl through the inlet pipe and is pumped via the distributor towards the periphery of the bowl.

When the process liquid reaches holes of the distributor, it will rise through the channels formed by the disc stack where it is evenly distributed.

The process liquid is continuously cleaned as it flows towards the center of the bowl. When the cleaned process liquid leaves the disc stack it rises upwards and leaves the bowl through outlet (220). Separated heavy phase flows over the gravity disc and leaves the bowl via outlet (221). The sludge and solid particles are forced out towards the periphery of the bowl and collected on the bowl wall, the sludge space.

The space between bowl hood and top disc is normally filled with heavy phase.

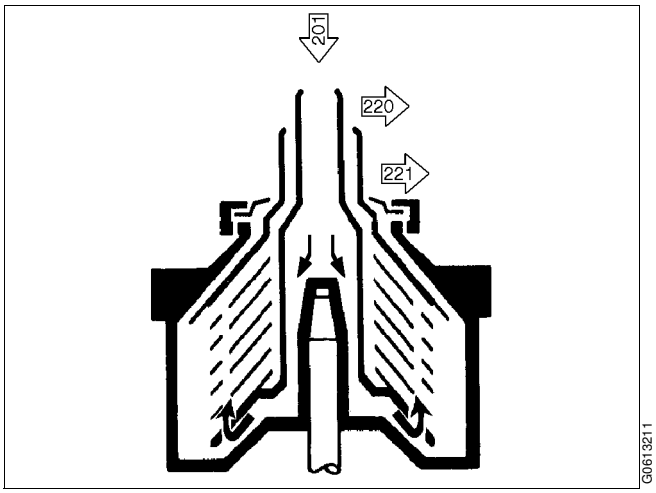

3.3.1 Purification

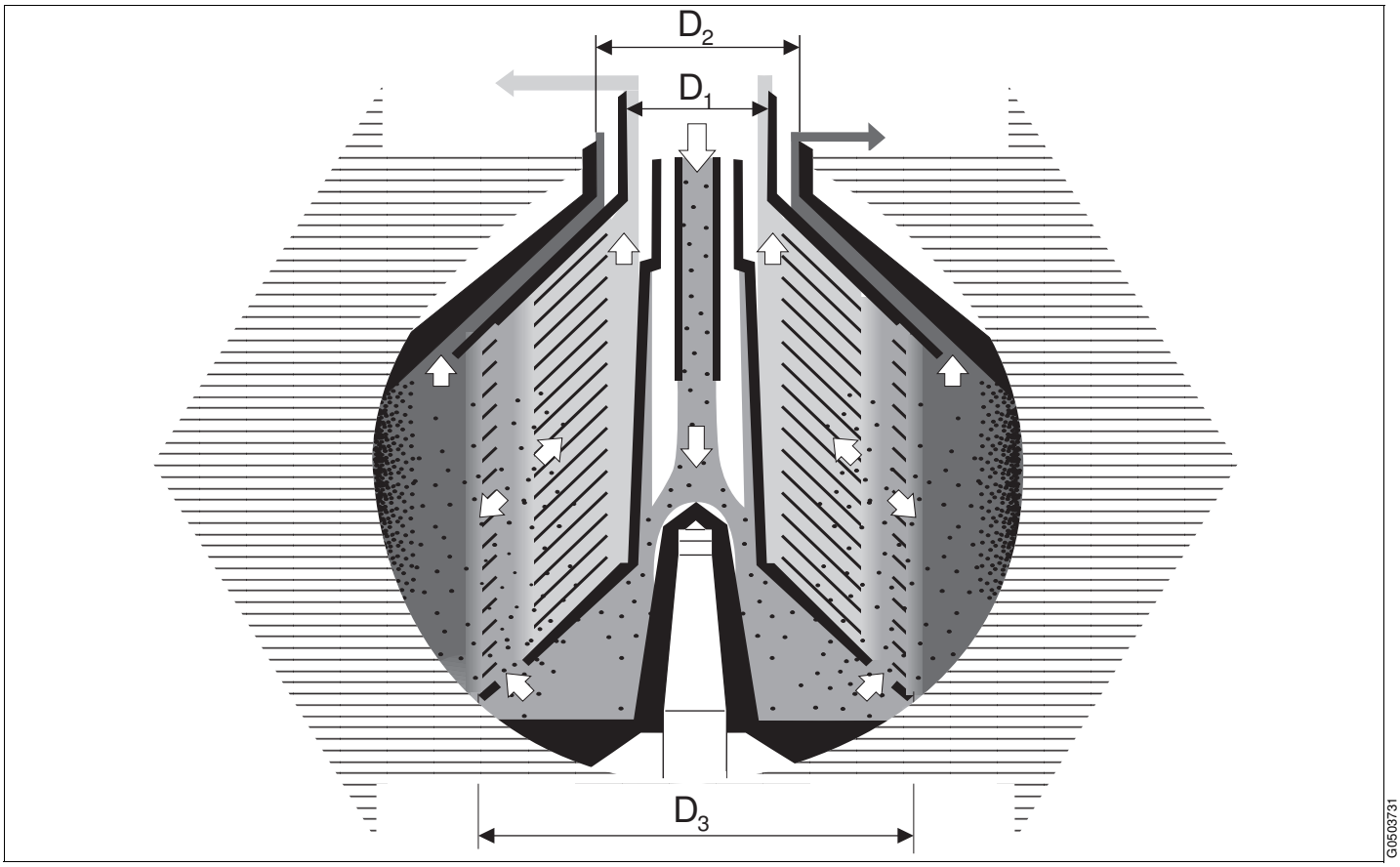

Centrifugal force

Process liquid

Heavy liquid phase

Light liquid phase

Sediment (solids)

Bowl parts

D_1 Diameter of inner outlet.

D_2 Hole diameter of gravity disc.

D_3 Diameter of interface.

This bowl has two liquid outlets. The process liquid flows through the centre and out under the distributor.

The liquid flows up and is divided among the interspaces between the bowl discs, where the liquid phases are separated from each other by action of the centrifugal force.

The heavy phase and any sediment move along the underside of the bowl discs towards the periphery of the bowl, where the sediment settles on the bowl wall. The heavy phase proceeds along the upper side of the top disc towards the neck of the bowl hood and leaves the bowl via the gravity disc - *the outer way* (dark coloured in illustration).

The light phase moves along the upper side of the bowl discs towards the bowl centre and leaves the bowl via the hole in the top disc neck - *the inner way* (light coloured in illustration).

3.3.2 Purifier bowl

The figure shows the characteristic parts of a purifier bowl:

1. Top disc with neck.
2. The gravity disc, which should be chosen according to directions in chapter “4.1.2 Selection of gravity disc” on page 37.

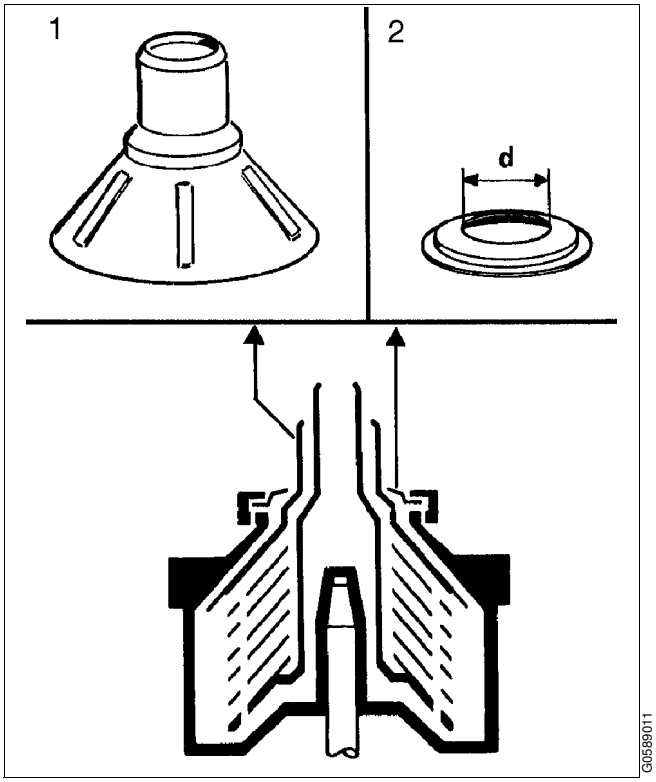

Purifier bowl

3.3.3 Liquid seal

In a purifier bowl the liquid seal prevents the light liquid phase from passing the outer edge of the top disc, thus eliminating flow out through the outer path. The bowl must therefore be filled with sealing liquid before the process liquid is admitted. The sealing liquid will be displaced slightly by the process liquid into a position that forms the interface. The location of the interface will be affected by the relative difference in density between the phases, but is also dependent on outer and inner diameters (D_1 and D_2 respectively).

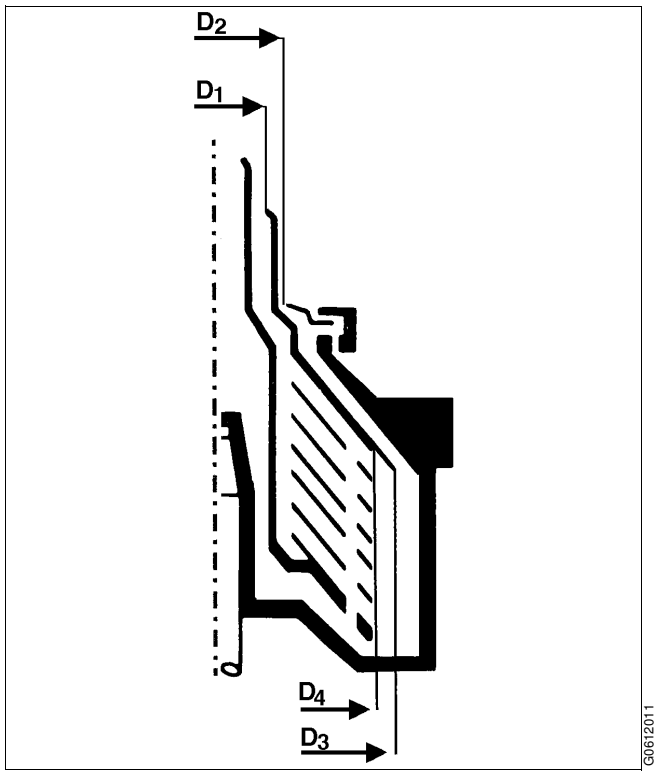

The sealing liquid:

- must be insoluble in the light phase.
- must not have higher density than the heavy phase.
- can be soluble in the heavy phase.

In most cases the heavy phase is used as sealing liquid.

In some cases and only if the process liquid contains a sufficient quantity of heavy phase (more than 25%), the process liquid can be supplied directly as the seal will form automatically.

3.3.4 Position of interface - gravity disc

The position of the interface is adjusted for optimum separation by altering the pressure balance of the two liquid phases oil and water inside the separator.

The purifier bowl is adjusted for separation liquid mixtures with various specific gravity ratios by altering the diameter of the outlet for the heavy phase (D_2). The heavier or more viscous the light phase and the larger the liquid feed the smaller the diameter should be. For this purpose a number of gravity discs with various hole diameters is delivered with the separator.

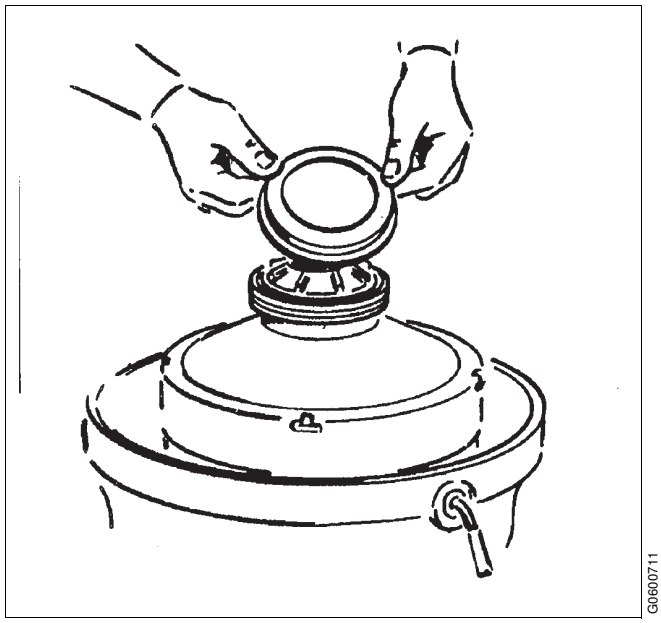

Exchange of gravity disc

The gravity disc is located inside the bowl hood. A gravity disc with a larger hole will move the interface towards the bowl periphery, whereas a disc with a smaller hole will place it closer to the bowl centre.

In a purifier bowl the position of the interface should be located between the disc stack edge and the outer edge of the top disc.

When selecting a gravity disc for a purifier the general rule is to use the disc having the largest possible hole without causing a break of the water seal.

Where to locate the interface depends on which phase should be delivered pure, and on the proportions between the amounts of the two phases as well.

- If the light phase is wanted more free from the heavy one, the interface should be placed nearer the bowl periphery, however not more than the outer edge of the top disc (the gravity disc is too big), as this would break the liquid seal.
- The heavier or more viscous the light phase and the larger the liquid feed the smaller the diameter should be.
- When the heavy phase (water) is wanted more free from the light one (oil), the interface should be placed nearer the bowl centre, however not inside the outer edge of the discs (the gravity disc is too small), as this would prevent the liquid flow.

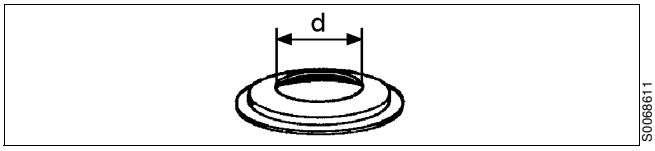

Gravity disc

3.3.5 Clarification

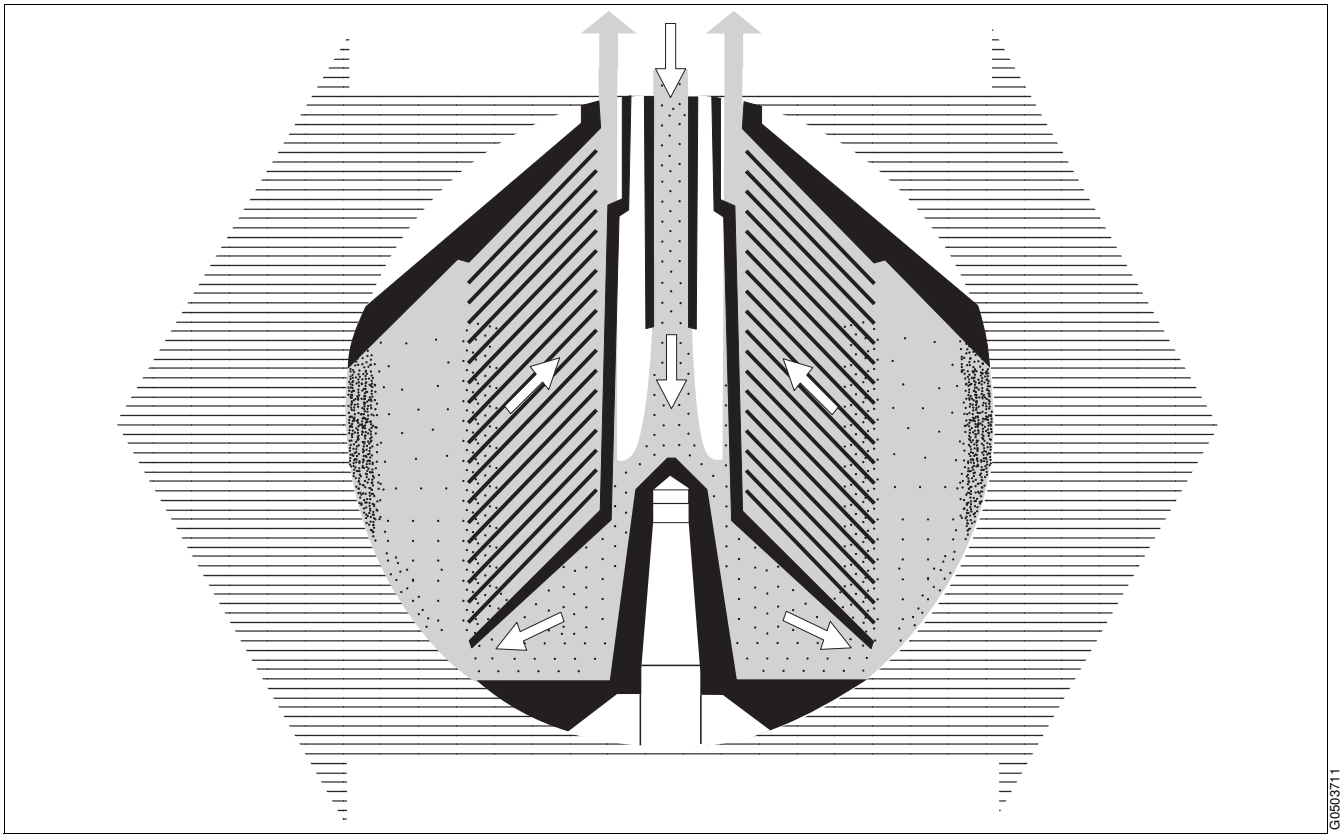

Centrifugal force

Process liquid

Bowl parts

Sediment (solids)

This bowl has one liquid outlet.

The process liquid flows through the centre of the distributor.

The liquid flows up and is divided among the interspaces between the bowl discs, where the sediment is separated from the liquid by action of the centrifugal force.

The sediment move along the underside of the bowl discs towards the periphery of the bowl, where it settle on the bowl wall.

The separation is influenced by changes in the viscosity (separating temperature) or in the throughput.

Clarifier bowl

The illustration shows characteristic parts of the clarifier bowl:

1. Discharge collar
2. Bowl disc without caulks (metal strips)

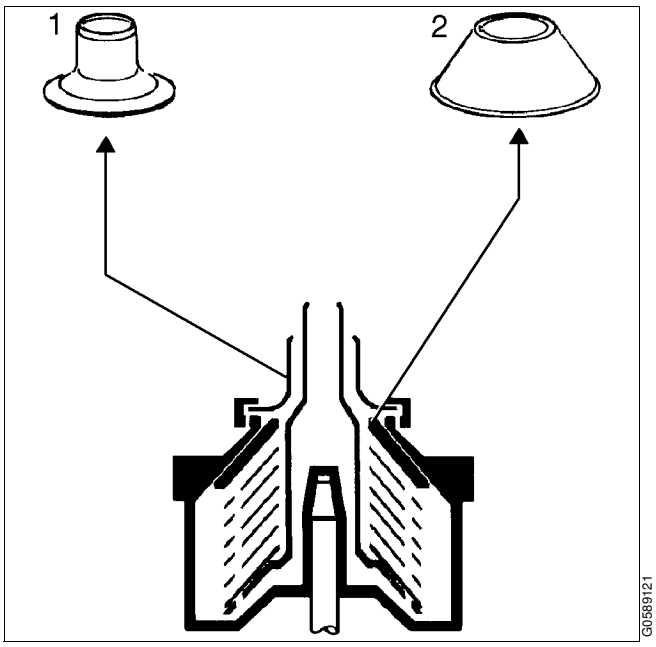

Clarifier bowl

3.4 Mechanical function

3.4.1 Main parts

1. Separator bowl.
2. Vertical driving device.
3. Horizontal driving device.
4. Double pump.

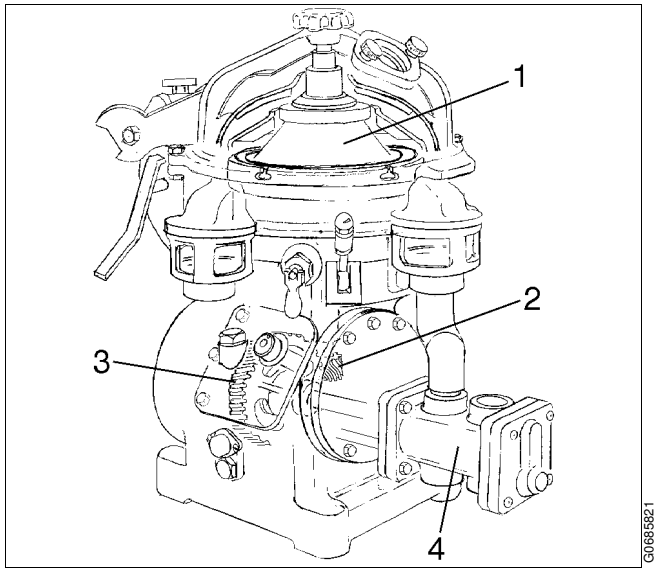

Separator with double pump

3.4.2 Inlet and outlet

The inlet and outlets consist of the following parts:

- The inlet to pump (201.1).
- The outlet from pump to heater (201.2).
- The inlet from heater to separator (201.3).
- The inlet for water seal (206).
- The outlet for clean oil (220).
- The outlet for water (221).
- Drain of frame (460).

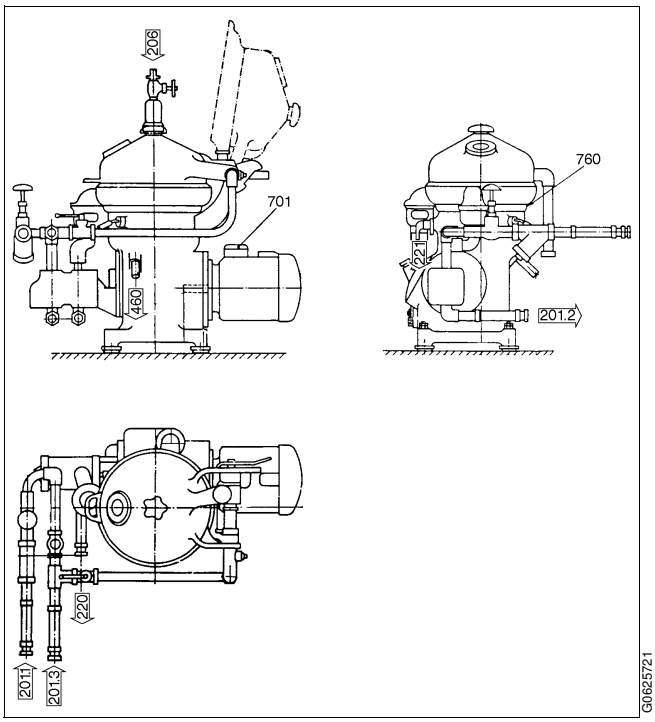

Separator with in- and outlet pump

- The inlet (201).
- The inlet for water seal (206).
- The outlet for clean oil (220).
- The outlet for water (221).
- Drain of frame (460).

See drawings and connection lists on pages 141 to 144.

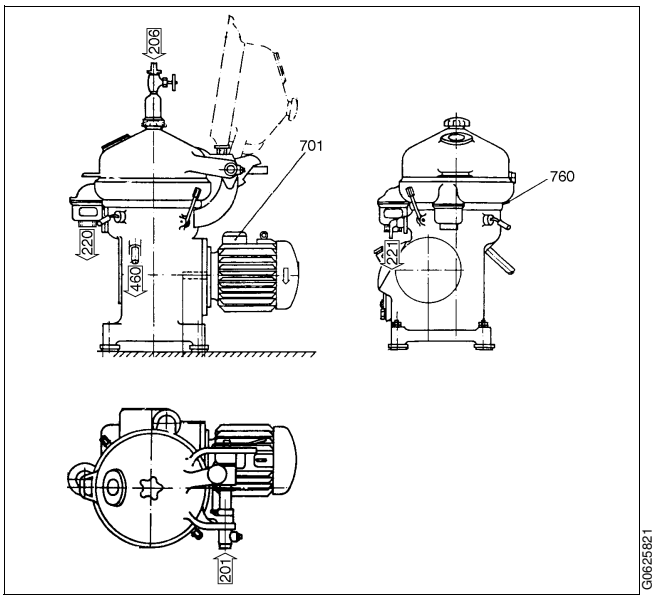

Separator without pump

3.4.3 Mechanical power transmission

The main parts of the power transmission between motor and bowl are illustrated in the figure.

The friction coupling ensures a gentle start and acceleration and at the same time prevents overloading of the worm gear and motor.

The worm gear has a ratio which increase the bowl speed several times compared with the motor speed. For correct ratio see chapter “8.2 Technical data” on page 138.

To reduce bearing wear and the transmission of bowl vibrations to the frame and foundation, the top bearing of the bowl spindle is mounted in a spring casing.

The worm wheel runs in a lubricating oil bath. The bearings on the spindle and the worm wheel shaft are lubricated by the oil splash produced by the rotating worm wheel.

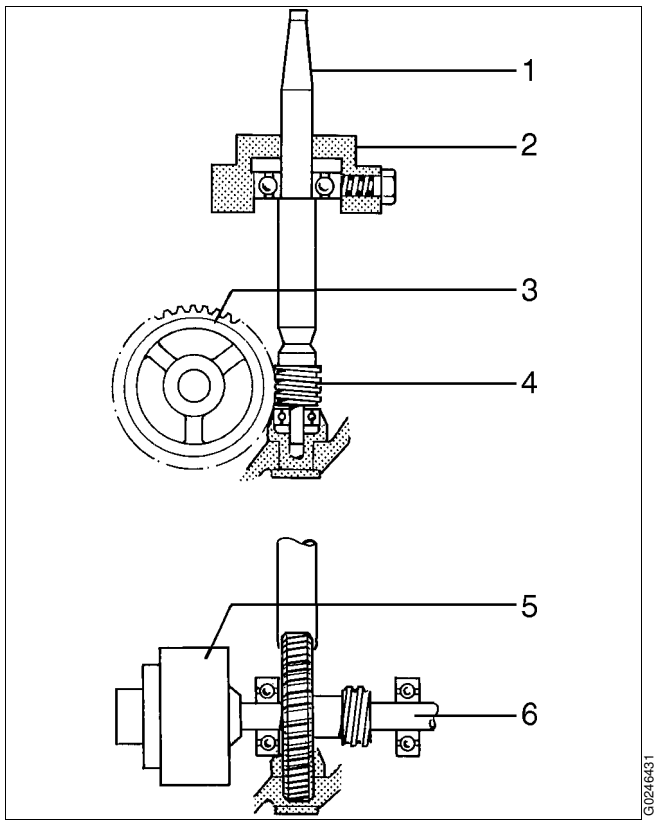

1. *Bowl spindle*
2. *Top bearing and spring casing*
3. *Worm wheel*
4. *Worm*
5. *Friction coupling*
6. *Worm wheel shaft*

3.4.4 Brake

The separator is equipped with a hand operated brake to be used when stopping the separator. The use of the brake reduces the retardation time of the bowl and critical speeds will therefore be quickly passed.

The brake lining acts on the outside of the bowl body.

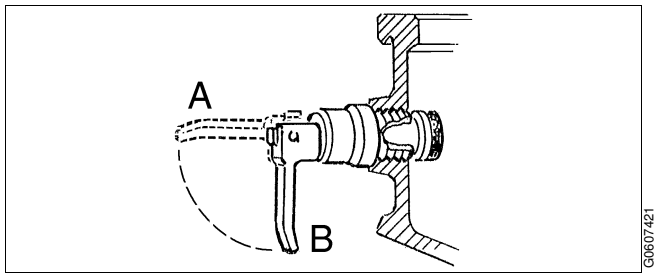

Applying (A) and releasing (B) of brake

3.4.5 Sensors and indicators

Revolution counter

A revolution counter indicates the speed of the separator and is driven from the worm wheel shaft. The correct speed is needed to achieve the best separating results and for reasons of safety. The number of revolutions on the revolution counter for correct speed is shown in chapter “8 Technical reference” on page 131. Refer to name plate for speed particulars.

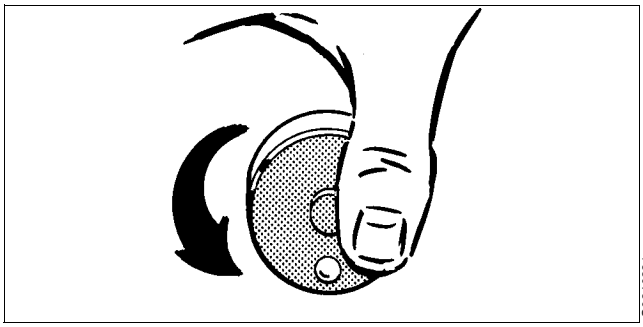

Revolution counter - speed indicator

Sight glass

The sight glass shows the oil level in the worm gear housing.

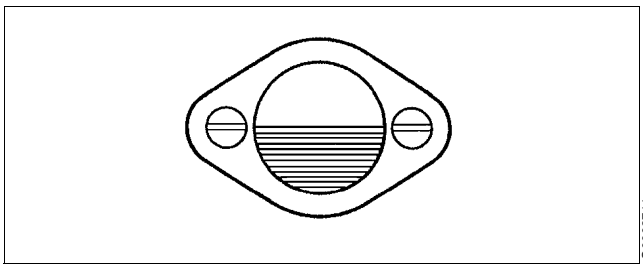

Sight glass - oil level

3.5 Definitions

Back pressure Pressure in the separator outlet.

Clarification Liquid/solids separation with the intention of separating particles, normally solids, from a liquid having a lower density than the particles.

Clarifier disc An optional disc, which replaces the gravity disc in the separator bowl, in the case of clarifier operation. The disc seals off the heavy phase (water) outlet in the bowl, thus no liquid seal exists.

Density Mass per volume unit. Expressed in kg/m^3 at specified temperature, normally at 15 °C.

Gravity disc Disc in the bowl hood for positioning the interface between the disc stack and the outer edge of the top disc. This disc is only used in purifier mode.

Interface Boundary layer between the heavy phase (outer) and the light phase (inner) in a separator bowl.

Liquid seal Liquid in the solids space of the separator bowl to prevent the light phase from leaving the bowl through the heavy phase outlet, in purifier mode.

Major Service (MS) Overhaul of the complete separator, including bottom part. Renewal of seals in bowl, gaskets in inlet/outlet, seals and bearings in bottom part.

Purification Liquid/liquid/solids separation with the intention of separating two intermixed and mutually insoluble liquid phases of different densities. Solids having a higher density than the liquids can be removed at the same time. The lighter liquid phase (oil), which is the major part of the mixture, shall be purified as far as possible.

Sediment (sludge) Solids separated from a liquid.

Throughput The feed of process liquid to the separator per time unit. Expressed in m^3/h or lit/h.

Viscosity Fluid resistance against movement. Normally expressed in centistoke ($cSt = mm^2/sec$), at specified temperature

4 Operating instructions

Contents

4.1 Operating routine 36

4.1.1 Before first start 36
4.1.2 Selection of gravity disc 37
4.1.3 Before normal start 38
4.1.4 Starting and running-up procedure 40
4.1.5 At full speed 41
4.1.6 During operation 41
4.1.7 Stopping procedure 42
4.1.8 Emergency stop 43

4.2 Cleaning the bowl 44

4.2.1 Removal of separated sludge 44
4.2.2 Disc stack 45
4.2.3 Assembly the bowl 45

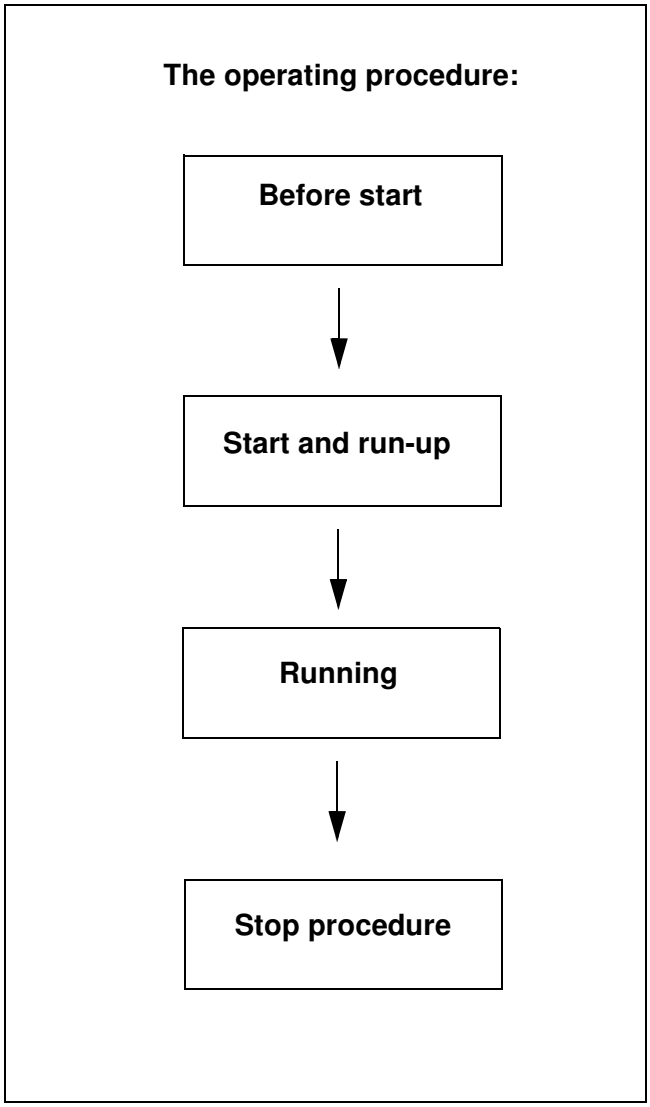

4.1 Operating routine

These instructions are related only to the separator itself.

NOTE

If there is a system manual, always follow the operating instructions of the system manual. If there is no system manual the instructions below are to be followed

4.1.1 Before first start

Technical demands for connections and logical limitations for the separator is described in the chapter “8 Technical reference” on page 131 and the documents:

a. Technical data

b. Basic size drawing

c. Connection list

d. Interface description

e. Foundation drawing

Before first start the following checkpoint must be checked:

- Motors equipped with regreasing nipples: When starting the motor for the first time, or after long storage of the motor, apply the specified quantity of grease until new grease is forced out of the grease outlet.
- Ensure the machine is installed correctly and that feed-lines and drains have been flushed clean.
- Fill oil in the gear housing. Fill up to the middle of the sightglass. Use the correct grade of oil. The separator is delivered without oil in the worm gear housing. For grade and quality, see “8.9 Lubricants” on page 149.

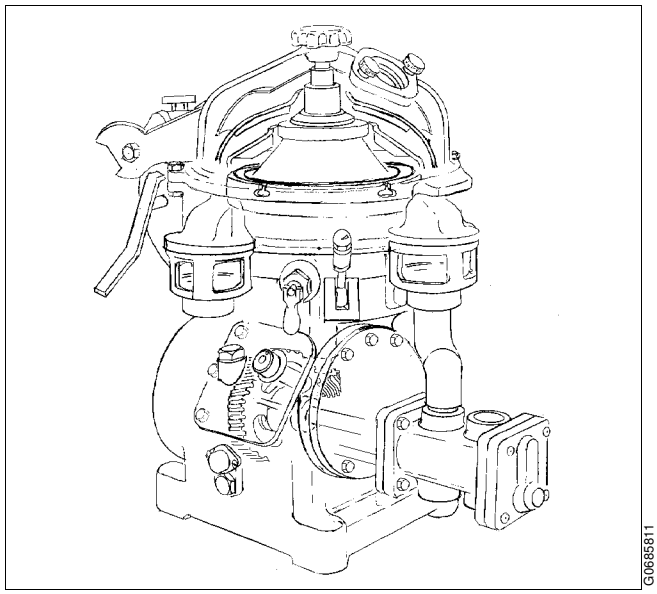

Separator with double pump

4.1.2 Selection of gravity disc

The separator is delivered with a set of gravity discs. The diameter (d) of the gravity disc (2) sets the position of the interface in the separator. The separation efficiency can be optimized by selection of the correct diameter for each process. See “8.2.1 Selection of gravity disc with the nomograph” on page 139

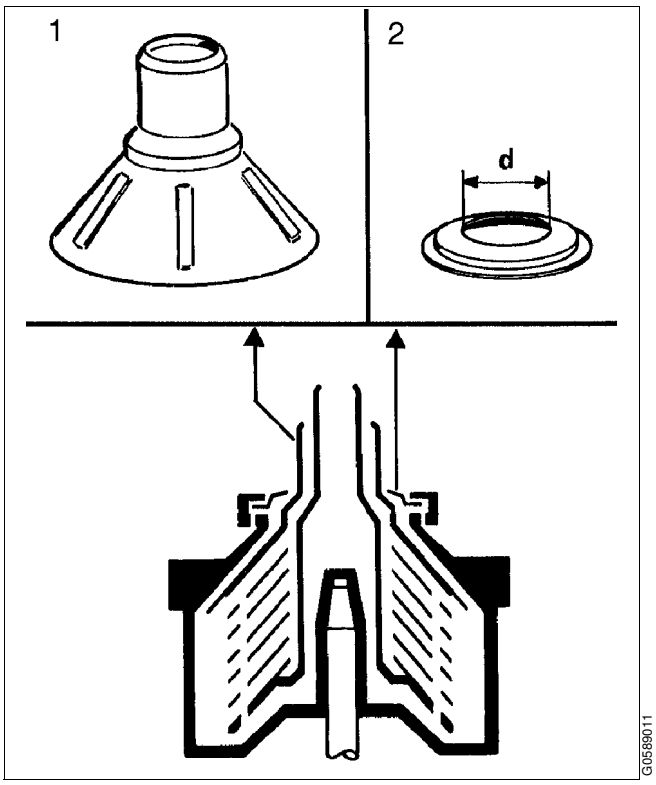

Separator bowl with top disc and gravity disc

4.1.3 Before normal start

Check these points before every start.

1. Ensure the bowl is clean and that the separator is properly assembled.

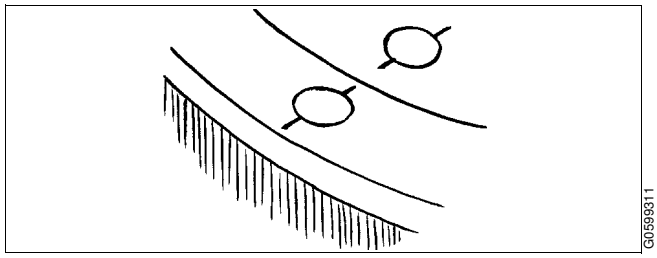

Check separator is assembled

2. Make sure that all inlet and outlet couplings and connections have been correctly made and are properly tightened to prevent leakage.

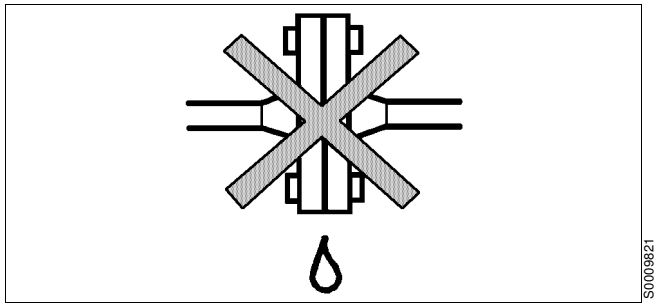

Check pipe connections

3. Check that the hooks and screws for the collecting cover are fully tightened.

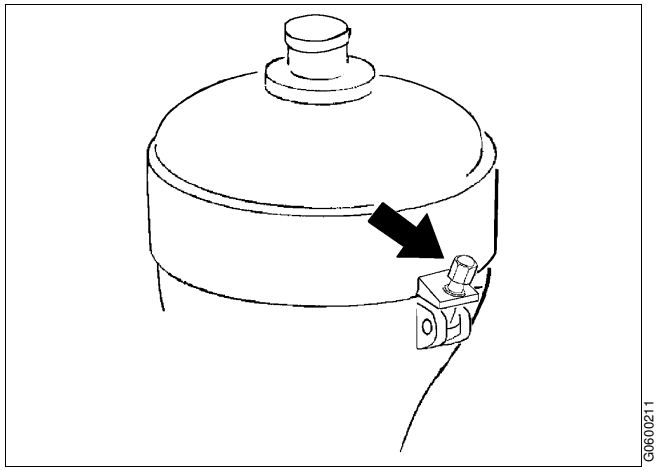

Hook bolts for collecting cover

4. Read the oil level. The middle of the sight glass indicates the **minimum** level. Refill if necessary. For grade and quality, see “8.9 Lubricants” on page 149.

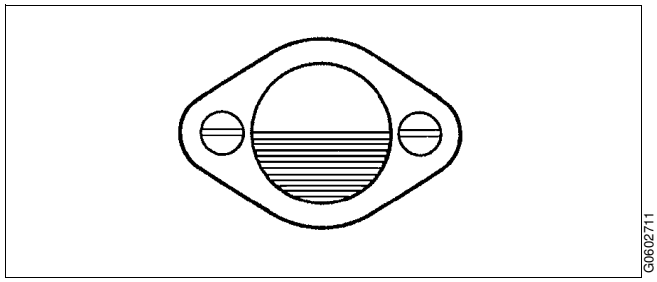

Check oil level

5. Release the brake.

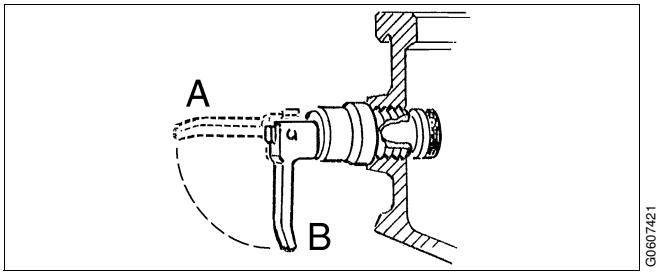

Release the brake by moving it from pos. A to B

6. Make sure the direction of rotation of the motor and bowl corresponds to the sign on the frame.

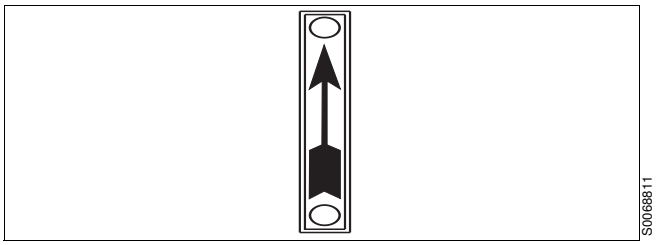

4.1.4 Starting and running-up procedure

1. After starting the separator, visually check to be sure that the motor and separator have started to rotate.
2. Check the direction of rotation. The revolution counter should run counter-clockwise.

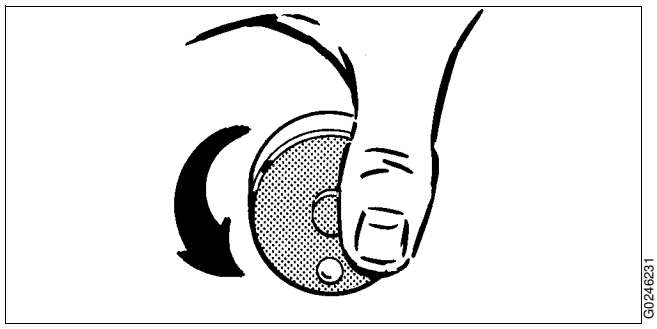

Direction of rotation

3. Be alert for unusual noises or conditions. Smoke and odour may occur at the start when friction pads are new.

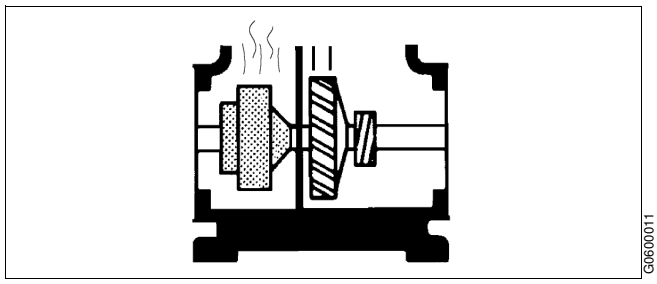

Smoke and odour

4. Note the normal occurrence of critical speed vibration periods.
5. During start the current reaches a peak and then slowly drops to a low and stable value. For normal length of the start-up period see “8.2 Technical data” on page 138.

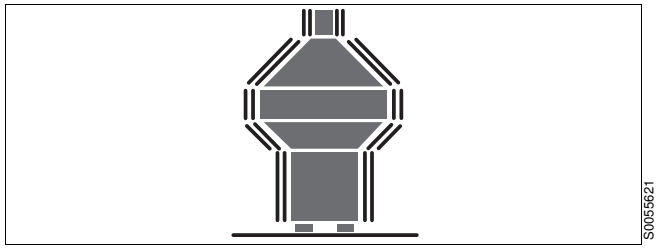

Vibration

WARNING

Disintegration hazards

When excessive vibration occurs, **stop** separator and **keep bowl filled** with liquid during rundown.

The cause of the vibrations must be identified and corrected before the separator is restarted.

Excessive vibrations may be due to incorrect assembly or poor cleaning of the bowl.

4.1.5 At full speed

1. If running the separator as a purifier, supply liquid (water) to form the liquid seal. Continue until liquid (water) flows out through the heavy phase (water) outlet. The liquid (water) should have the same temperature as the process liquid and be supplied quickly.
2. Close the liquid (water) feed.
3. Start the oil feed slowly to avoid breaking the water seal. Then fill the bowl as quickly as possible.
4. Adjust to desired throughput.

4.1.6 During operation

Do regular checks on:

- feed inlet temperature (if applicable)
- collecting tank level
- sound/vibration of the separator
- motor current.

4.1.7 Stopping procedure

1. If running the separator as a purifier, feed sealing water.
2. Turn off the feed.
3. Stop the separator.
4. Pull the brake (A).

   Wait until the separator has come to a complete standstill (2-5 minutes).

   Release the brake (B) when the separator is at standstill.

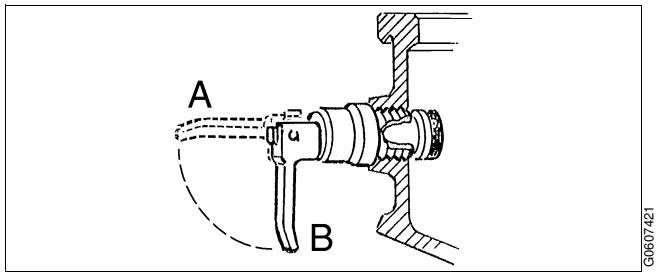

Pull the brake from position B to A

5. Manual cleaning should be carried out before next start up. See "4.2.1 Removal of separated sludge".

WARNING

Entrapment hazards

Make sure that rotating parts have come to a **complete standstill** before starting **any** dismantling work.

The revolution counter and the motor fan indicate if the separator is rotating or not.

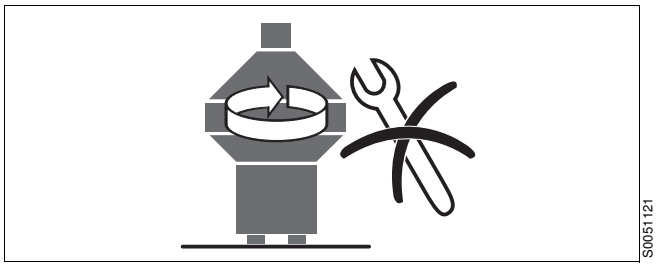

4.1.8 Emergency stop

The emergency stop is always installed according to local safety regulations. It is often a button placed on the wall near the separator or on the control equipment.

If the separator begins to vibrate excessively during operation, stop it immediately by switching off the separator motor, e.g. by pushing the emergency stop button.

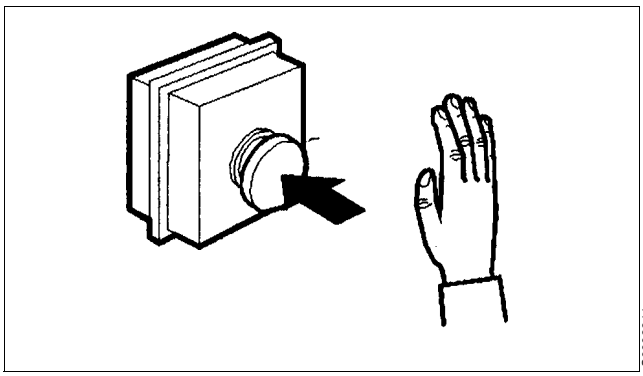

Emergency stop

WARNING

Disintegration hazards

Evacuate the area around the separator. The separator may be hazardous when passing its critical speeds during the run-down.

NOTE

After an emergency stop the cause of the fault must be identified.

If all parts have been checked and the cause remains unclear, contact Alfa Laval for advice.

4.2 Cleaning the bowl

The separated sludge is accumulating on the inside surface of the separator bowl. How often the separator needs to be cleaned, depends on the amount of sediment entering the separator. High solids content or high throughput has the consequence that the cleaning needs to be done more often.

Intervals for a specific case must be based on experience.

Information about sludge content in the feed can be achieved either by using a lab centrifuge or to run the separator for 2 - 3 hours and then stop and open the bowl to check the amount of sludge.

Then prolong or shorten the cleaning interval.

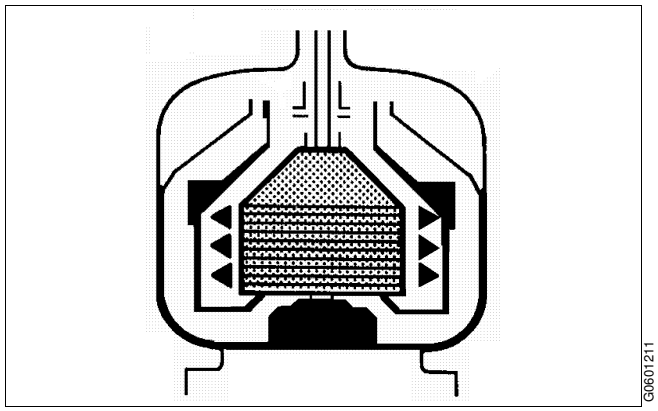

Sludge accumulation

4.2.1 Removal of separated sludge

Remove the sludge collected on the inside of the bowl as follows:

1. Stop the separator as described in “4.1.7 Stopping procedure” on page 42.

WARNING

Entrapment hazards

Make sure that rotating parts have come to a **complete standstill** before starting **any** dismantling work.

The revolution counter and the motor fan indicate if the separator is rotating or not.

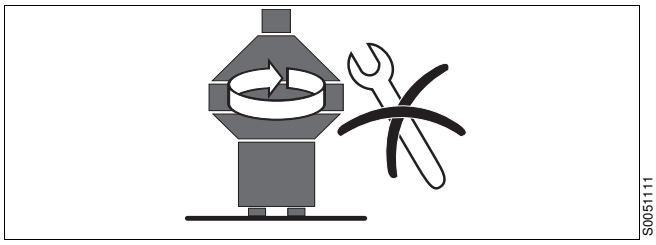

2. Dismantle the bowl as described in “6.2.1 Bowl” on page 88.

4.2.2 Disc stack

When the sediment is not sticky, the disc stack can be cleaned by “hurling”.

1. Clean the other bowl parts.
2. Assemble the bowl.
3. Close and lock the collecting cover.
4. Run up to full speed without liquid feed.
5. After “hurling” either continue separation or stop and open the bowl and remove the sediment.

If the sediment adheres firmly, dissolve it by submerging the distributor and the disc stack in a suitable detergent.

If “hurling” has no effect, clean the discs one by one.

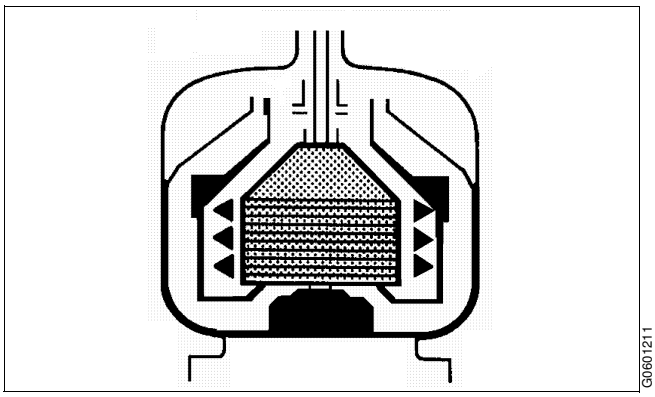

Bowl cleaning by “hurling”

4.2.3 Assembly the bowl

Each bowl constitutes a balanced unit. Exchange of any major part may need rebalancing of the bowl. To prevent mixing of parts, e.g. in an installation comprising of several machines of the same type, the major bowl parts carry the machine manufacturing number or its last three digits.

NOTE

Be sure bowl parts are not interchanged. Out of balance vibration will reduce ball bearing life.

The assembly procedure is described in “6.3.3 Bowl” on page 105.

Purifier and clarifier bowl

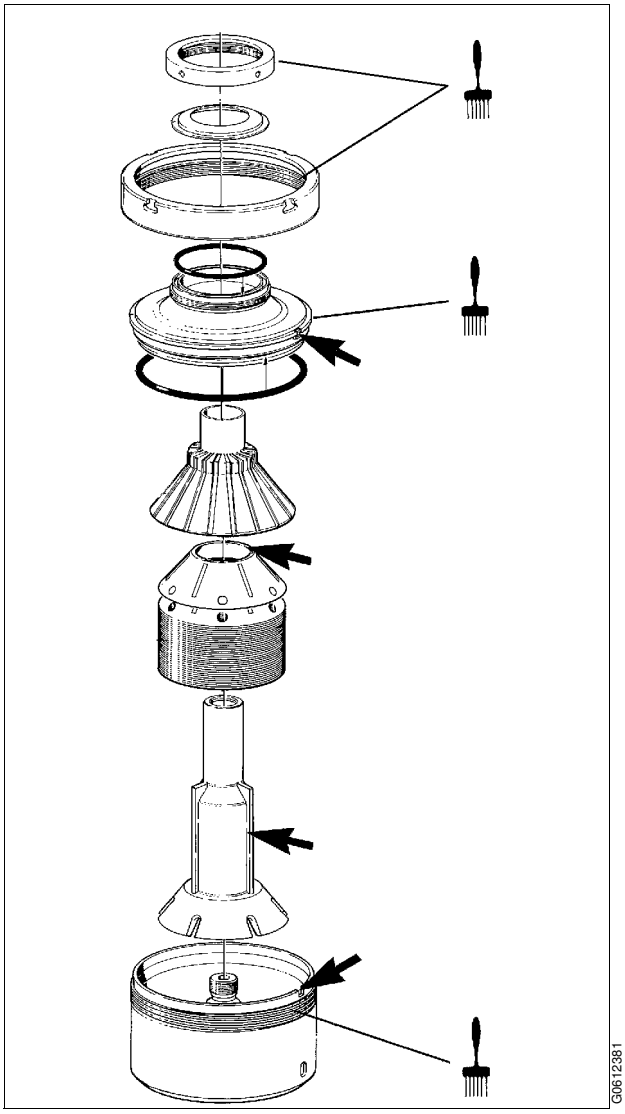

Purifier bowl

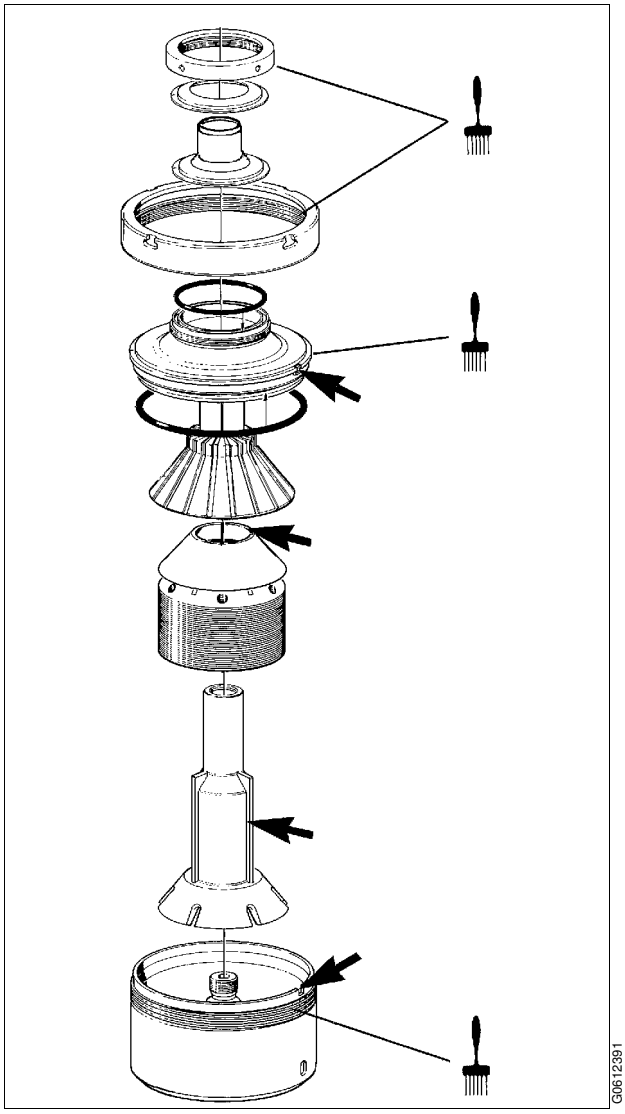

Clarifier bowl

The arrows indicate position of guides in the bowl.

Lubrication needed
Molykote 1000

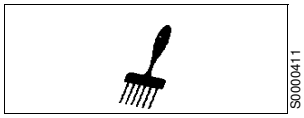

The assembly procedure is described in
“6.3.3 Bowl” on page 105.

5 Service instructions

Contents

5.1 Periodic maintenance 49

5.1.1 Introduction 49
5.1.2 Maintenance intervals 49
5.1.3 Maintenance procedure 51
5.1.4 Service kits 51

5.2 Maintenance Logs 52

5.2.1 Daily checks 52
5.2.2 Oil change 53
5.2.3 IS - Intermediate Service 54
5.2.4 MS-Major Service 55

5.3 MS - Check points 57

5.3.1 Corrosion 57
5.3.2 Erosion 59
5.3.3 Cracks 60
5.3.4 Disc stack pressure 61
5.3.5 Lock ring; wear and damage 62
5.3.6 Radial wobble of bowl spindle 63
5.3.7 Height position of bowl / bowl spindle 64
5.3.8 Bowl spindle cone and bowl body nave 65
5.3.9 Coupling disc of motor 66
5.3.10 Friction pads 67
5.3.11 Brake 68
5.3.12 Top bearing springs 69
5.3.13 Ball bearing housing 69
5.3.14 Worm wheel and worm; wear of teeth 70

5.4 Cleaning 72

5.4.1 External cleaning 72
5.4.2 Cleaning agents 73
5.4.3 Cleaning of bowl discs 75

5.5 When changing oil 76
5.5.1 Oil change procedure 76

5.6 Common maintenance directions 77
5.6.1 Vibration 77
5.6.2 Ball and roller bearings 78
5.6.3 Friction coupling 80
5.6.4 Before shutdown 81
5.6.5 Before start-up 81
5.6.6 Lubrication of electric motor 82

5.7 Lifting instructions 83

5.1 Periodic maintenance

5.1.1 Introduction

Periodic, preventive maintenance reduces the risk of unexpected stoppages and breakdowns. Maintenance logs are shown on the following pages in order to facilitate periodic maintenance.

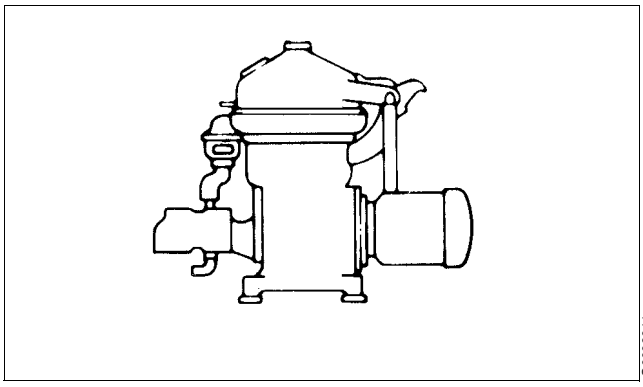

Periodic maintenance prevents stoppages

WARNING

Disintegration hazards

Separator parts that are worn beyond their safe limits or incorrectly assembled may cause severe damage or fatal injury.

5.1.2 Maintenance intervals

The following directions for periodic maintenance give a brief description of which parts to clean, check and renew at different maintenance intervals.

The Service Logs for each maintenance interval later in this chapter give detailed enumeration of the checks that must be done.

Daily checks consist of simple check points to carry out for detecting abnormal operating conditions.

Oil change interval is every 1500 hours or at least once every year if the total number of operating hours is less than 1500 hours.

Time of operation between oil changes can be extended from the normal 1500 hours to 2000 hours if a synthetic oil of group D is used.

In seasonal operation change the oil before a new period.

IS - Intermediate Service consists of an overhaul of the separator bowl, inlet and outlet every 3 months or 2000 operating hours. Seals in bowl and gaskets in the inlet/outlet device are renewed.

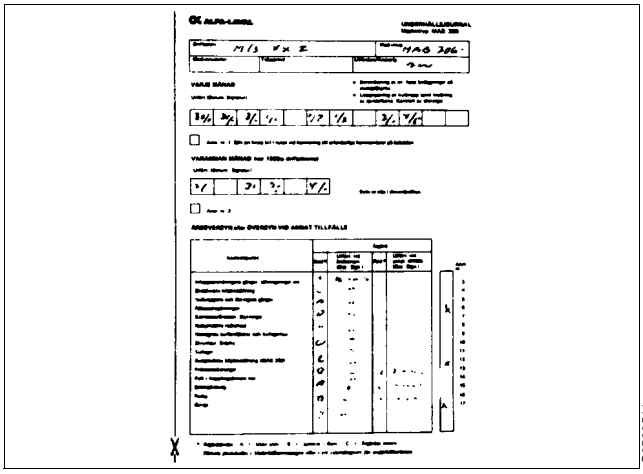

Maintenance log

MS - Major Service consists of an overhaul of the complete separator every 12 months or 8000 operating hours. An Intermediate Service is performed, and the flat belt, friction elements, seals and bearings in the bottom part are renewed.

3-year service consists of service of the coupling bearings, service of frame intermediate part and renewal of frame feet. The rubber feet get harder with increased use and age.

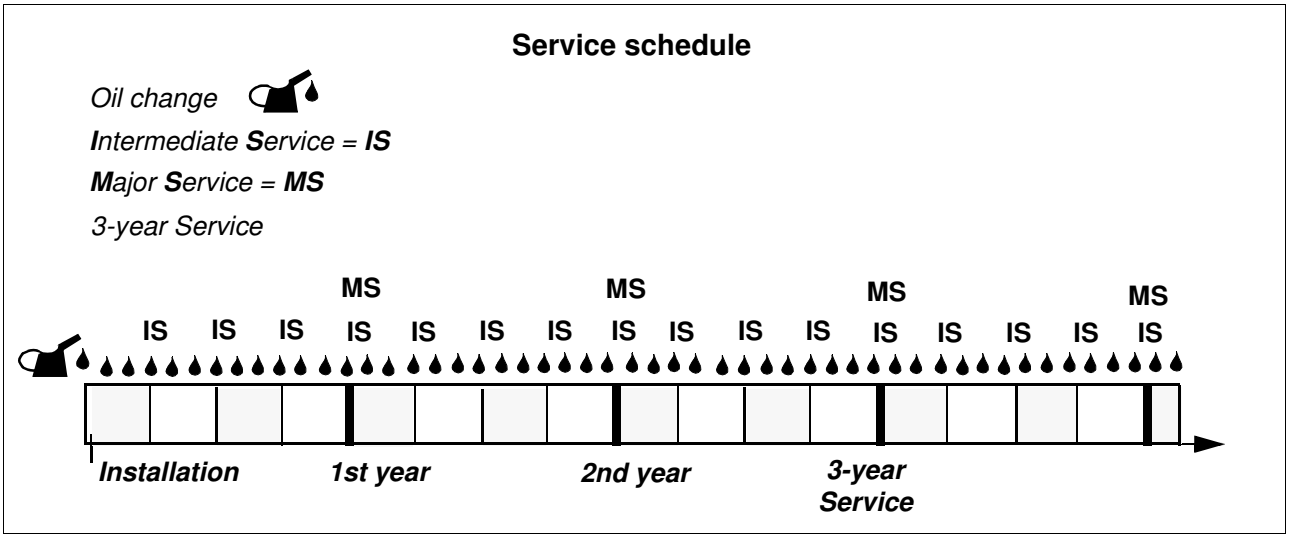

Other

Check and prelubricate spindle bearings of separators which have been out of service for 6 months or longer.

NOTE

Do not interchange bowl parts!

To prevent mixing of parts, e.g. in an installation comprising several machines of the same type, the major bowl parts carry the machine manufacturing number or its last three digits.

5.1.3 Maintenance procedure

At each Intermediate and Major Service, take a copy of the Service Log and use it for notations during the service.

An Intermediate and Major Service should be carried out in the following manner:

1. Dismantle the parts as mentioned in the Service Log and described in Chapter “6 Dismantling/Assembly” on page 85.

   Place the separator parts on clean, soft surfaces such as pallets.

2. Inspect and clean the dismantled separator parts according to the Service Log.

3. Fit all the parts delivered in the Service kit while assembling the separator as described in chapter “6 Dismantling/Assembly” on page 85. The assembly instructions have references to check points which should be carried out during the assembly.

5.1.4 Service kits

Special service kits are available for Intermediate Service (IS) and Major Service (MS).

For other services the spare parts have to be ordered separately.

Note that the parts for IS are **not** included in the MS kit.

The contents of the service kits are described in the Spare Parts Catalogue.

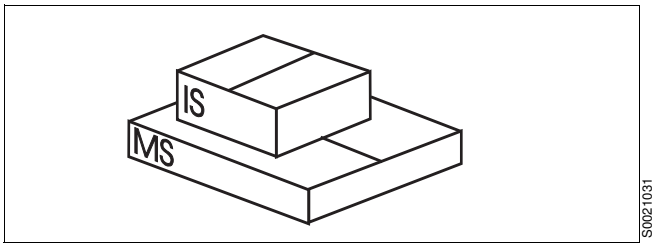

Spare parts kits are available for Intermediate Service and Major Service

NOTE

Always use Alfa Laval genuine parts as otherwise the warranty will become invalid.

Alfa Laval takes no responsibility for the safe operation of the equipment if non-genuine spare parts are used.

5.2 Maintenance Logs

Keep a log of inspection and maintenance performed. Parts repeatedly renewed should be given special consideration. The cause of repeated failures should be determined and corrected. Discuss your problems with an Alfa Laval representative and, when necessary, request a visit by an Alfa Laval Service engineer.

Rate of corrosion and erosion and notification of cracks should also be a part of this log. Note the extent of damage and date the log entries so that the rate of deterioration can be observed.

5.2.1 Daily checks

The following steps should be carried out daily.

Main component and activity	Part	Page	Notes
Inlet and outlet			
Check for leakage	Collecting cover	-	
Separator bowl			
Check for vibration and noise		77	
Worm wheel shaft and gear casing			
Check for vibration and noise			
Check	Oil level in gear housing	53	
Electrical motor			
Check for heat, vibration and noise		-[1]	

[1] See manufacturer's instruction

5.2.2 Oil change

The oil change and check of worm gear should be carried out every 1500 * hours of operation.

Main component and activity	Part	Page	Notes
Worm wheel shaft and gear housing			
Check	Worm wheel and worm	70	
Renew	Oil * in gear housing	53	

* When using a group D oil, time of operation between oil changes can be extended from the normal 1500 hours to 2000 hours.

When the separator is running for short periods, the lubricating oil must be changed every 12 months even if the total number of operating hours is less than 1500 hours (2000 h).

In a new installation, or after replacement of gear, change the oil after 200 operating hours.

See chapter “8 Technical reference” on page 131 for further information.

5.2.3 IS - Intermediate Service

Name of plant:		Local identification:	
Separator:	MAB 104B-14/24	Manufacture No./Year:	
Total running hours:		Product No.:	881241-08-17
Date:		Signature:	

Renew all parts included in the Intermediate Service kit (IS) and do the following activities.

Main component and activity	Part	Page	Notes
Inlet and outlet, frame			
Clean and inspect	Housings and frame hood	–	
Separator bowl			
Clean and inspect	Bowl hood	–	
	Top disc	–	
	Bowl discs	75	
	Distributor	–	
	Threads on lock ring and bowl body	62	
Check	Galling of guide surface	62	
	Corrosion, erosion, cracks	57 - 60	
Power transmission			
Change	Oil in oil sump	76	
Electrical motor			
Lubrication (if nipples are fitted)	See sign on motor	–	
Vertical driving device			
Lubricate	Top bearing	–	
Signs and labels on separator			
Check attachment and legibility	Safety label on hood	164	
	Other plates and labels	–	

5.2.4 MS-Major Service

Name of plant: Local identification:

Separator: MAB 104B-14/24 Manufacture No./Year:

Total running hours: Product No.: 881241-08-17

Date: Signature:

Main component and activity	Part	Page	Notes
Inlet and outlet			
Clean and inspect	Threads of inlet	–	
Separator bowl			
Clean and check	Lock ring	62	
	Bowl hood	–	
	Top disc	–	
	Gravity disc	–	
	Bowl discs	75	
	Distributor	–	
	Bowl body	–	
	Corrosion	57	
	Erosion	59	
	Cracks	60	
	Disc stack pressure	61	
Renew	O-rings and sealings	–	
Worm wheel shaft and gear housing			
Check	Worm wheel and worm	70	
	Radial wobble of worm wheel shaft	–	
	Axial play of coupling disc	66	
Renew	Oil in gear housing	53	

Main component and activity	Part	Page	Notes
Vertical driving device			
Clean and check	Bowl spindle	65	
	Buffers	–	
	Ball bearing housing indentations	63	
	Radial wobble of bowl spindle	63	
Renew	Ball bearings and top bearing springs	65	
Brake			
Clean and check	Spring and brake shoe	68	
Renew	Brake plug	68	
Friction coupling			
Clean and check	Friction coupling	80	
Renew	Friction pads	80	
	Lipseal ring	80	
Frame feet			
Renew	Vibration dampers	118	
Electrical motor			
Clean and check	Position of coupling disc	66	
Lubrication (if nipples are fitted)	–	–	
Signs and labels on separator			
Check attachment and readability, replace if needed	Safety label on collecting cover	164	

5.3 MS - Check points

5.3.1 Corrosion

Evidence of corrosion attacks should be looked for and rectified each time the separator is dismantled. Main bowl parts such as the bowl body, bowl hood and lock ring must be inspected with particular care for corrosion damage.

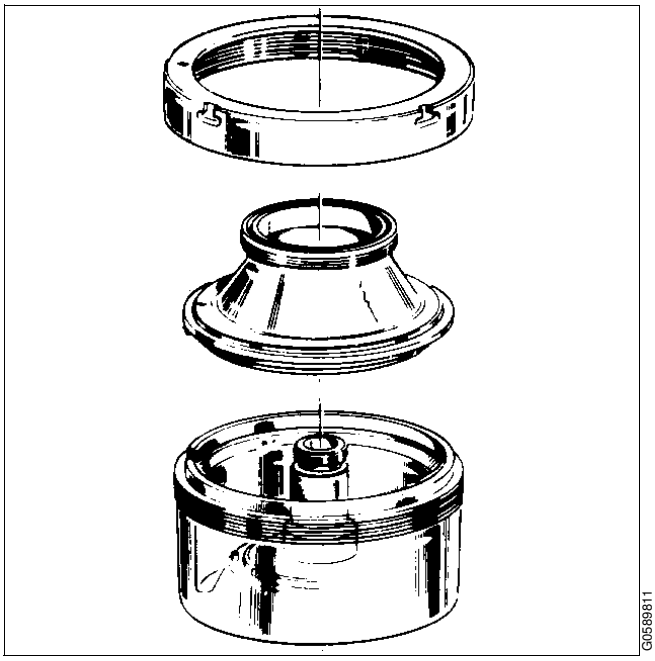

Main bowl parts

WARNING

Disintegration hazard

Inspect regularly for corrosion damage. Inspect frequently if the process liquid is corrosive.

Always contact your Alfa Laval representative if you suspect that the largest depth of the corrosion damage exceeds 1,0 mm or if cracks have been found. Do not continue to use the separator until it has been inspected and given clearance for operation by Alfa Laval.

Cracks or damage forming a line should be considered as being particularly hazardous.

Non-stainless steel and cast iron parts

Corrosion (rusting) can occur on unprotected surfaces of non-stainless steel and cast iron. Frame parts can corrode when exposed to an aggressive environment.

Stainless steel

Stainless steel parts corrode when in contact with either chlorides or acidic solutions. Acidic solutions cause a general corrosion. The chloride corrosion is characterised by local damage such as pitting, grooves or cracks. The risk of chloride corrosion is higher if the surface is:

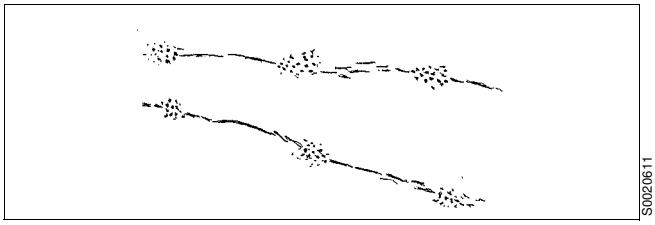

Corrosion forming a line

- Exposed to a stationary solution.
- In a crevice.
- Covered by deposits.
- Exposed to a solution that has a low pH value.

Corrosion damage caused by chlorides on stainless steel begins as small dark spots that can be difficult to detect.

- Inspect closely for all types of damage by corrosion and record these observations carefully.
- Polish dark-coloured spots and other corrosion marks with a fine grain emery cloth. This may prevent further damage

.

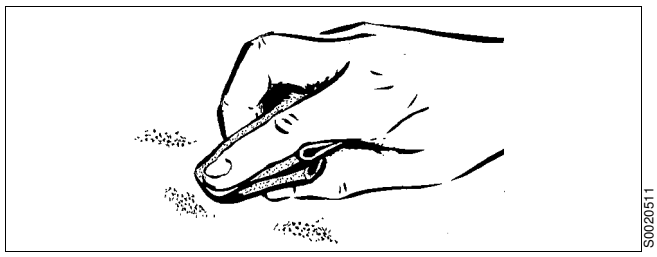

Polish corrosion spots

WARNING

Disintegration hazard

Pits and spots forming a line may indicate cracks beneath the surface.
All forms of cracks are a potential danger and are totally unacceptable.
Renew the part if corrosion can be suspected of affecting its strength or function.

Other metal parts

Separator parts made of materials other than steel, such as brass or other copper alloys, can also be damaged by corrosion when exposed to an aggressive environment. Possible corrosion damage can be in the form of pits and/or cracks.

5.3.2 Erosion

Erosion can occur when particles suspended in the process liquid slide along or strike against a surface. Erosion can become intensified locally by flows of higher velocity.

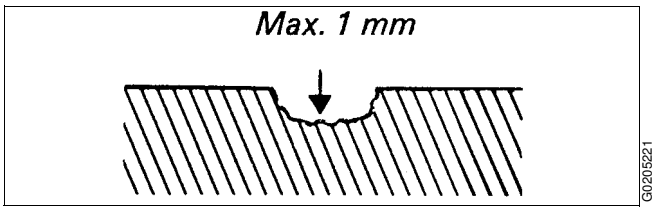

Maximum depth of damage

WARNING

Disintegration hazard

Inspect regularly for erosion damage. Inspect frequently if the process liquid is erosive.

Always contact your Alfa Laval representative if the largest depth of any erosion damage exceeds 1.0 mm. Valuable information as to the nature of the damage can be recorded using photographs, plaster impressions or hammered-in lead.

Erosion is characterised by:

- Burnished traces in the material.
- Dents and pits having a granular and shiny surface.

Surfaces particularly subjected to erosion are:

1. The underside of the distributor in the vicinity of the distribution holes and wings.
2. The internal surface of the bowl body that faces the conical part of the distributor.

Look carefully for any signs of erosion damage. Erosion damage can deepen rapidly and consequently weaken parts by reducing the thickness of the metal.

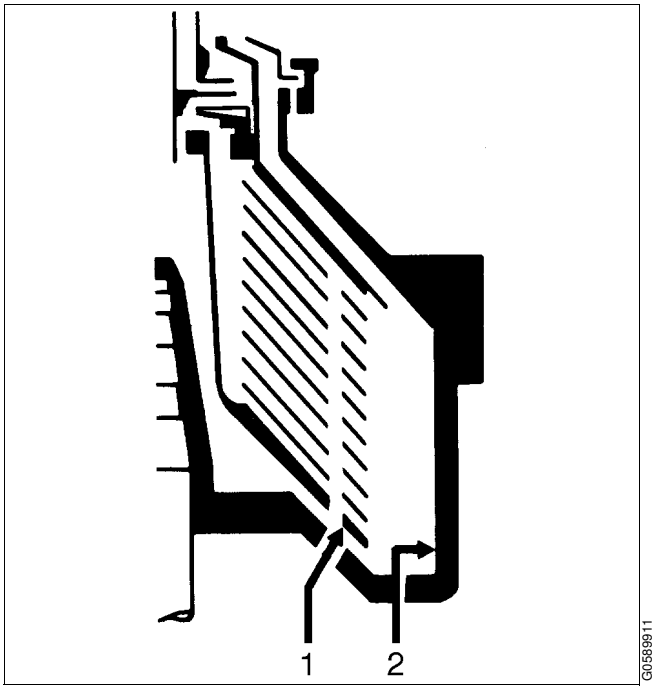

Erosion check points

WARNING

Disintegration hazard

Erosion damage can weaken parts by reducing the thickness of the metal.

Renew the part if erosion can be suspected of affecting its strength or function.

5.3.3 Cracks

Cracks can initiate on the machine after a period of operation and propagate with time.

- Cracks often initiate in an area exposed to high cyclic material stresses. These are called fatigue cracks.
- Cracks can also initiate due to corrosion in an aggressive environment.
- Although very unlikely, cracks may also occur due to the low temperature embrittlement of certain materials.

The combination of an aggressive environment and cyclic stresses will speed-up the formation of cracks. Keeping the machine and its parts clean and free from deposits will help to prevent corrosion attacks.

WARNING

Disintegration hazard

All forms of cracks are potentially dangerous as they reduce the strength and functional ability of components.

Always renew a part if cracks are present.

It is particularly important to inspect for cracks in rotating parts.

Always contact your Alfa Laval representative if you suspect that the largest depth of the damage exceeds 1.0 mm. Do not continue to use the separator until it has been inspected and cleared for operation by Alfa Laval.

5.3.4 Disc stack pressure

The lock ring (1) should press the bowl hood (2) firmly against the bowl body (3). The hood in turn should exert a pressure on the disc stack (4), clamping it in place.

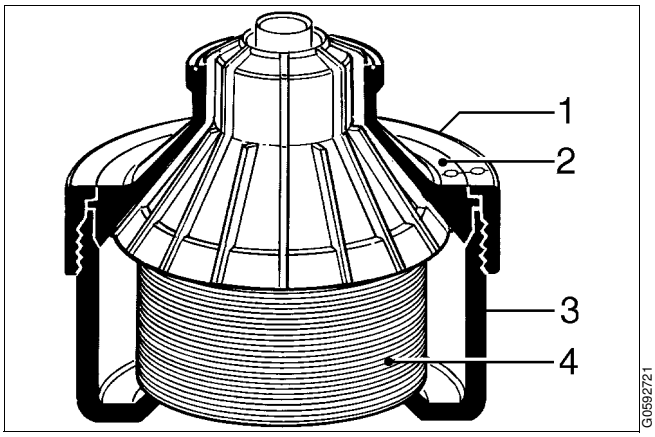

NOTE

Insufficient pressure in disc stack can cause out of balance vibration and reduced lifetime of ball bearings.

Compress the disc stack by tightening the lock ring, see chapter “6.3.3 Bowl” on page 105.

Correct pressure is obtained when it is possible to tighten the lock ring so far by hand that the ϕ-mark on the lock ring is positioned 60° - 90° before the mark on the bowl hood.

To achieve this, add an appropriate number of discs to the top of the disc stack beneath the top disc.

Then advance the lock ring by giving the spanner handle some blows till the ϕ-marks are passed and the bowl is fully assembled.

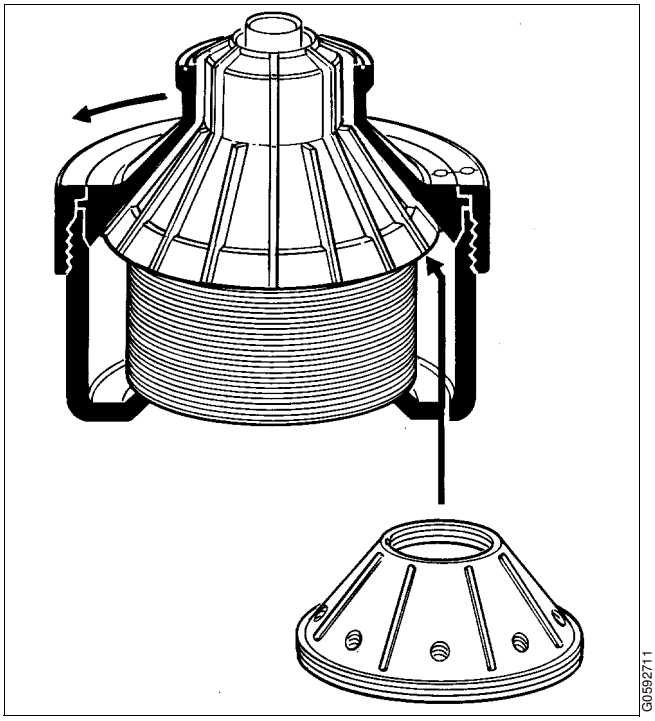

5.3.5 Lock ring; wear and damage

Excessive wear or impact marks on threads, guide and contact surfaces of the lock ring, bowl hood and bowl body may cause hazardous galling.

Check the thread condition by tightening the lock ring after removing the disc stack and bowl hood O-ring from the bowl.

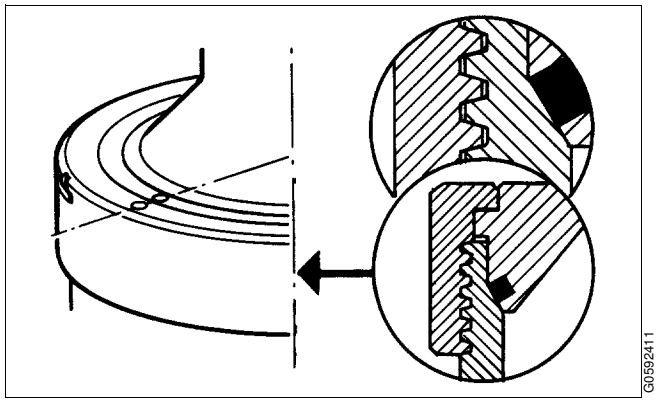

WARNING

Disintegration hazards

Wear on large lock ring thread must not exceed safety limit. The ϕ-mark on lock ring must not pass opposite ϕ-mark by more than the specified distance.

In a new bowl the alignment marks on the lock ring and the bowl hood are exactly opposite each other.

If thread wear is observed, mark the bowl hood at the new position of the alignment mark on the lock ring by punching in a new alignment mark.

Contact Your Alfa Laval representative

- If the original mark on the lock ring passes the corresponding mark on the bowl hood by more than 25° which corresponds to **45 mm**.
- If the alignment marks become illegible. The thread wear needs to be inspected and the new position of alignment marks determined.

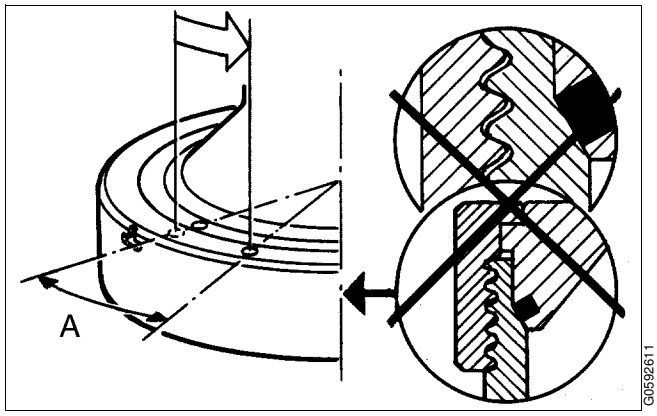

Maximum wear A=25°

Damage

The positions of the threads, contact and guide surfaces are indicated by arrows in the illustration.

Clean the threads, contact and guide surfaces with a suitable degreasing agent.

Check for burrs and protrusions caused by impact. Watch your fingers for sharp edges.

If damage is established, rectify using a whetstone or fine emery cloth (recommended grain size 240).

If the damage is considerable, use a fine single-cut file, followed by a whetstone.

5.3.6 Radial wobble of bowl spindle

- Spindle wobble is indicated by rough bowl run (vibration).

The bowl spindle wobble should be checked if the bowl spindle has been dismantled or if rough bowl running (vibration) occurs.

> **NOTE**
>
> Spindle wobble will cause rough bowl run. This leads to vibration and reduces lifetime of ball bearings.

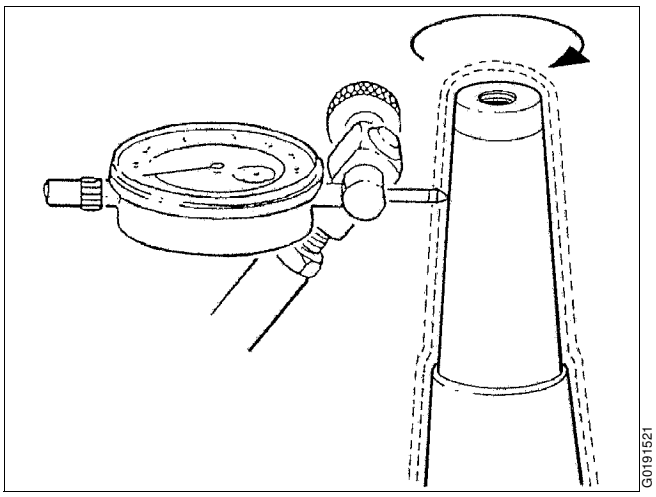

Maximum spindle wobble 0,15 mm

Check the wobble before mounting the bowl.

Before measuring, make sure that the buffer plugs are properly tightened.

- Fit a dial indicator in a support and fasten it to the frame.
- Remove the motor to get access to the coupling drum. Use the coupling drum to revolve the spindle manually.
- Measure the wobble at the top of the tapered end of the spindle. Maximum permissible radial wobble is **0.15 mm**.
- If wobble is too large, renew all the ball bearings on the spindle.

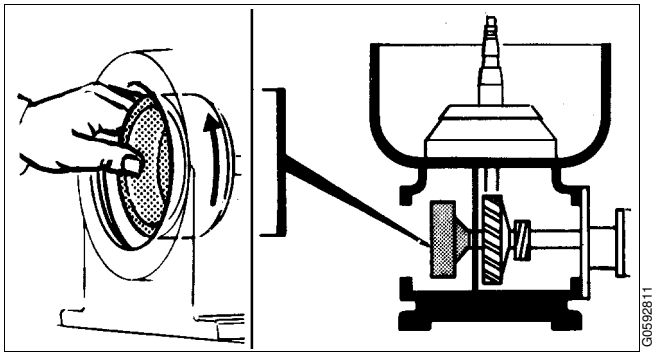

Rotate spindle by hand

Measure wobble after assembly. If it is still excessive, the spindle is probably damaged and must be renewed, contact your Alfa Laval representative.

5.3.7 Height position of bowl / bowl spindle

Whenever the bowl spindle has been removed, its height position relative to the frame must be checked.

The bowl must be in place in the separator. The lock ring tightened. Make sure the alignment marks ϕ on bowl hood and lock ring are in front of each other.

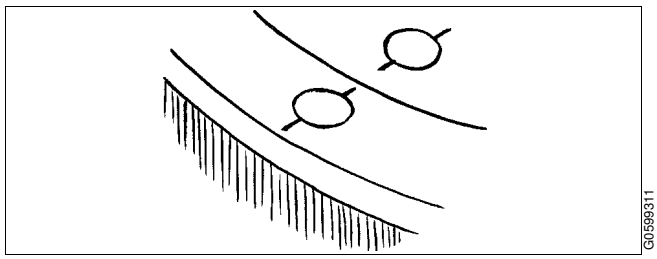

For correct height position the distance (H) between the top face of the large lock ring and the top rim of frame must be **34-36 mm**.

Alfa Laval ref. 537541, rev. 0

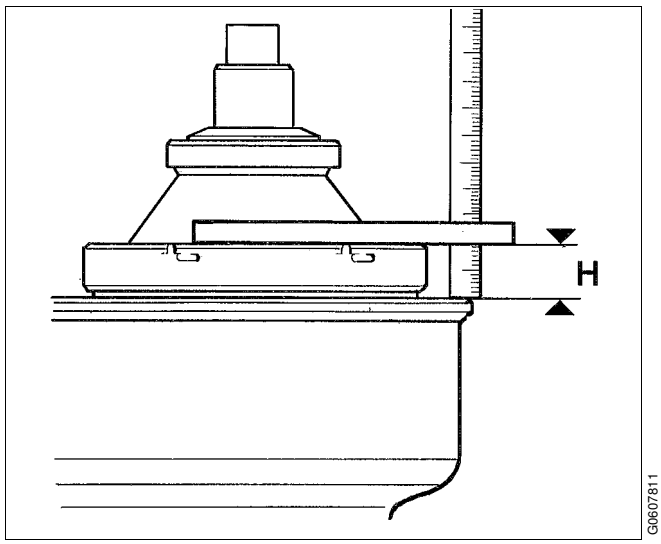

Adjustment is made with adjustment rings (1) under the thrust bearing at the bottom of the spindle.

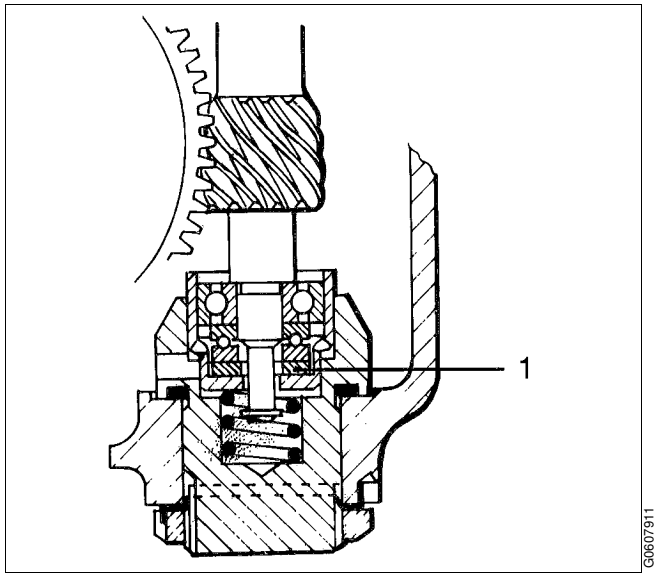

5.3.8 Bowl spindle cone and bowl body nave

Impact marks on the spindle cone or in the bowl body nave may cause poor fit and out-of-balance vibrations.

The bowl spindle and the nave should also be checked if the bowl spindle has been dismantled or if the bowl runs roughly.

Corrosion may cause the bowl to stick firmly to the spindle cone and cause difficulties during the next dismantling.

- Remove any impact marks with a scraper and/or whetstone.

Rust can be removed by using a fine-grain emery cloth (e.g. No. 320). Finish with polishing paper (e.g. No. 600).

NOTE

Always use a scraper with great care. The conicity must not be marred.

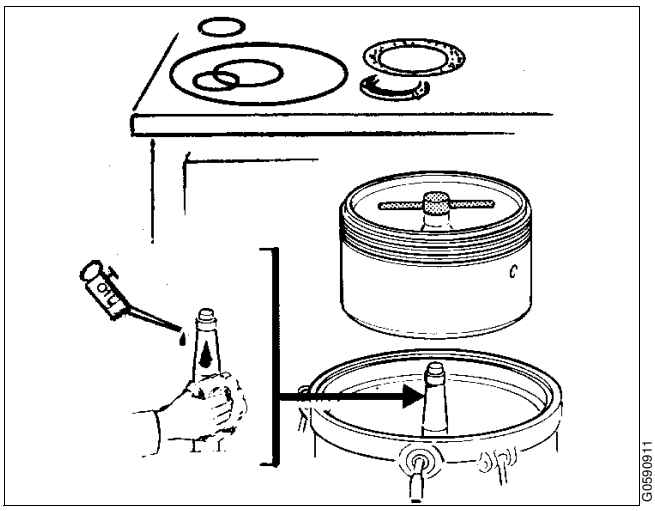

Oil the bowl spindle to prevent corrosion

5.3.9 Coupling disc of motor

The position of the coupling disc on the motor shaft is establishing the location of the friction pads inside the coupling.

If the coupling disc is loosened without first marking its position on the motor shaft, the correct position must be determined again.

1. Measure the distance on the frame.

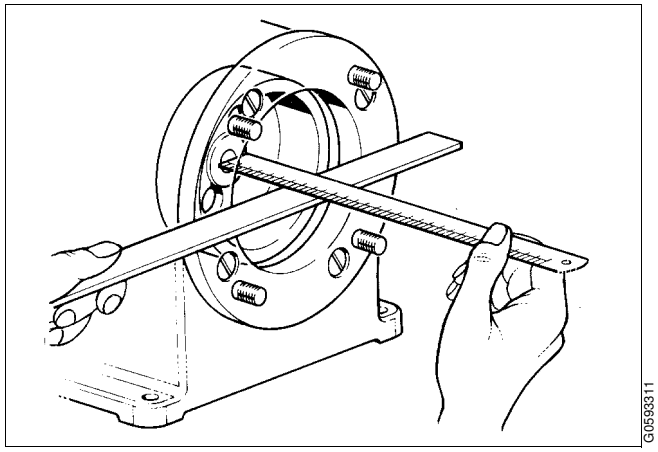

Frame distance

2. Measure the distance on the motor.

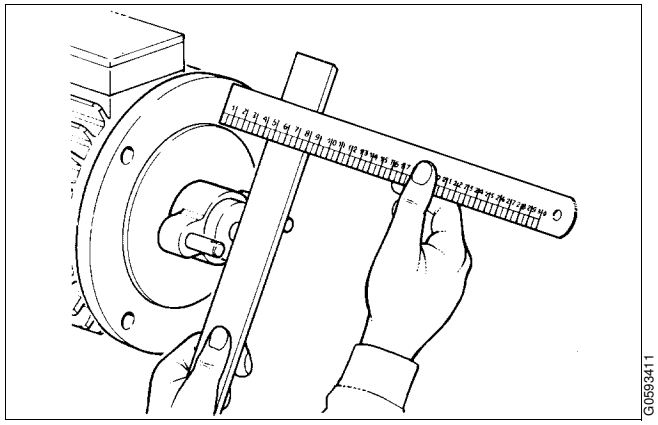

Motor distance

3. The coupling disc is in correct position when frame distance (1) is 32 mm larger than motor distance (2), see the illustration.

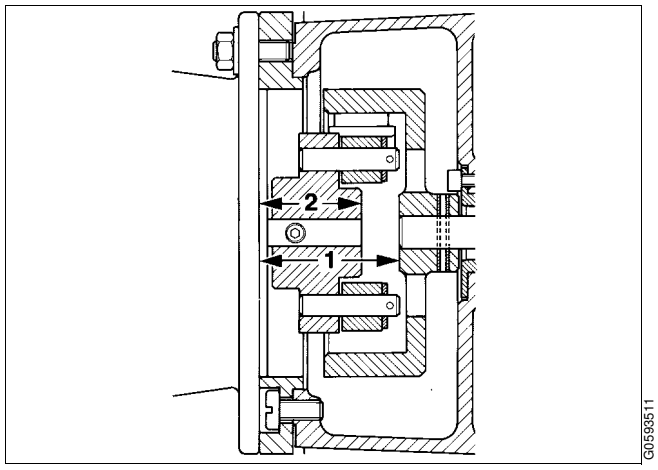

Position of coupling disc

5.3.10 Friction pads

Worn or oily pads will cause a long running-up period. Renew all the pads even when only one of them is worn.

If the pads are oily:

- Clean the pads as well as the inside of the coupling drum with a suitable degreasing agent.
- Roughen up the friction surfaces of the pads with a coarse file.

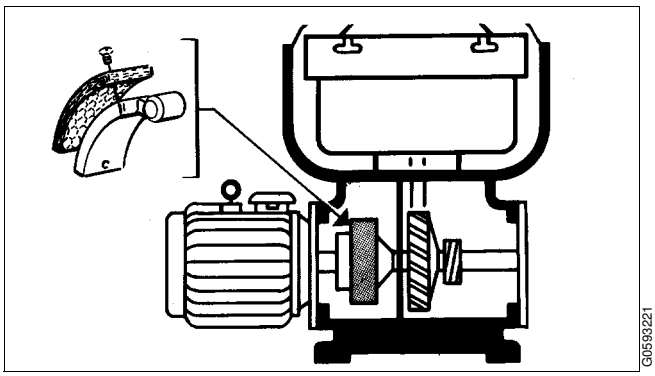

Friction pads

CAUTION

Inhalation hazard

When handling friction blocks/pads use a dust mask to make sure not to inhalate any dust.

Do not use compressed air for removal of any dust. Remove dust by vacuum or wet cloth.

See Safety instructions for environmental issues regarding correct disposal of used friction blocks/pads.

5.3.11 Brake

A worn or oily brake lining will lengthen the stopping time. Remove the bracket with the brake. Examine the friction element.

- Renew the lining when the friction material is worn down.
  - Remove rivet head by drilling.
  - Punch out rivet.
  - Fasten the new lining to brake shoe with a new rivet.
- If the friction element is oily: Clean the brake lining and the outside surface of the bowl body with a suitable degreasing agent.

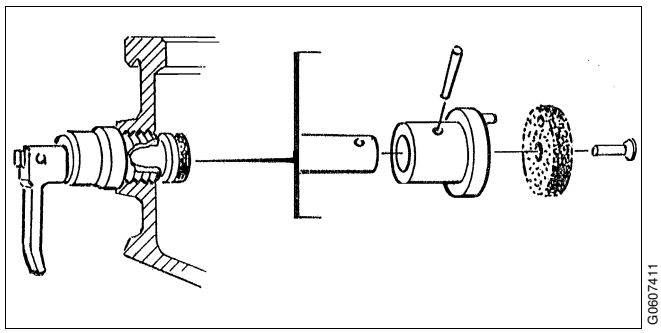

Friction lining

Checking the brake

After the brake assembly has been fitted, release the brake and rotate the bowl slowly by hand. If a scraping noise is heard, the friction element is probably touching the bowl surface.

For normal stopping time see “8.2 Technical data” on page 138.

5.3.12 Top bearing springs

Weakened or broken buffer springs (2) may give rise to machine vibration (rough bowl running).

The condition (stiffness) of a spring can hardly be determined without using special testing equipment. So, an estimation of the spring condition must be based on the knowledge of the machine run before the overhaul. It is recommended, however, to renew all the springs at the annual overhaul.

In case of a sudden spring fracture, all springs should be renewed even when only one spring has broken.

5.3.13 Ball bearing housing

- Defective contact surfaces for the buffers on the ball bearing housing may give rise to machine vibration (rough bowl running).

Examine the contact surface for the buffers (1) on the ball bearing housing (3). In case of defects (indentations deeper than 0.1 mm) renew the housing as well as buffers and springs.

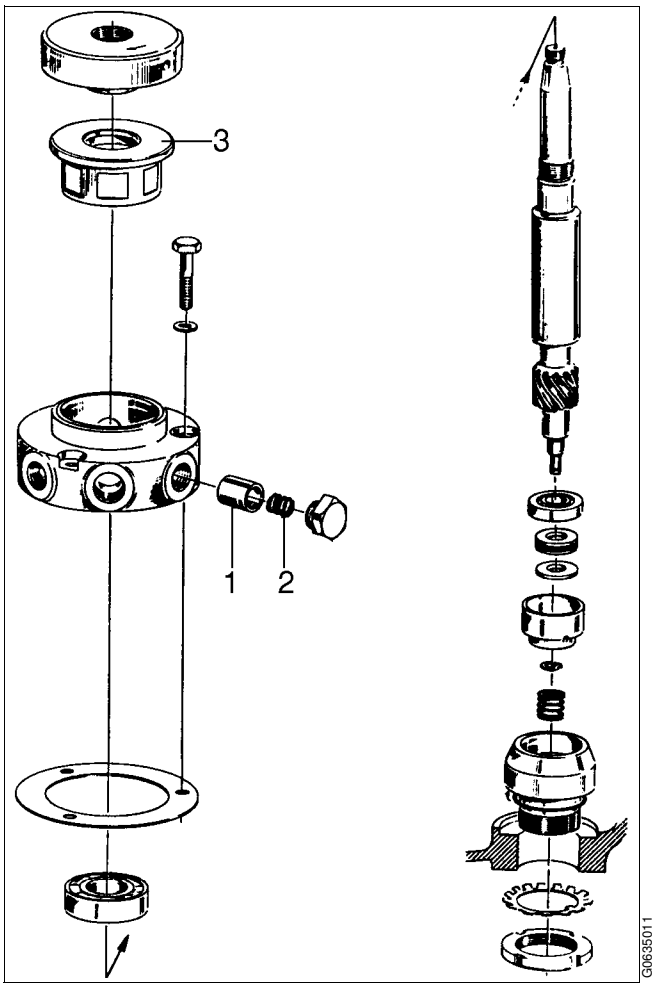

1. Radial buffer
2. Buffer spring
3. Ball bearing housing

5.3.14 Worm wheel and worm; wear of teeth

Check the teeth of worm wheel and worm for wear, see “ **Tooth appearance examples**” on page 71.

Examine the contact surfaces and compare the tooth profiles. The gear may operate satisfactorily even when worn to some degree.

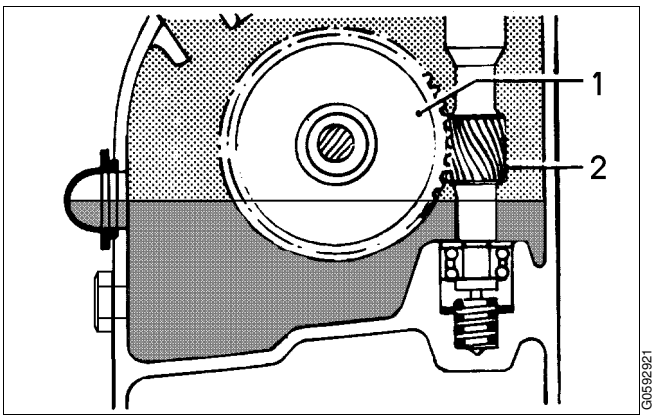

1. Worm wheel
2. Worm (part of bowl spindle)

NOTE

Renew both worm wheel and worm at the same time, even if only one of them is worn.

NOTE

Presence of metal chips in the oil bath is an indication that the gear is wearing abnormally.

When using mineral-type oil in the worm gear housing, the presence of black deposits on the spindle parts is an indication that the oil base has deteriorated seriously or that some of the oil additives have precipitated. If pits are found on the worm gear, the cause could be that the additives are not suitable for this purpose.

In all these cases it is imperative to change to a high-temperature oil. See chapter “8.9 Lubricants” on page 149.

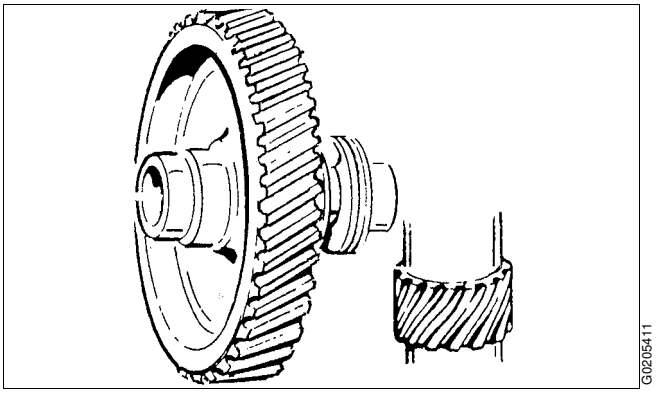

Tooth appearance examples

Satisfactory teeth

Uniform wear of contact surfaces. Surfaces are smooth.

Good contact surfaces will form on the teeth when the gear is subjected to only moderate load during its running-in period.

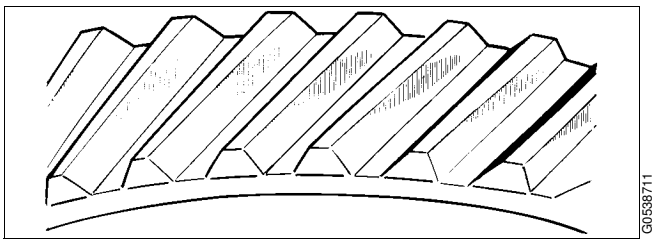

Satisfactory teeth

Worn teeth

Permissible wear is as a rule 1/3 of the thickness of the upper part of a tooth, provided that

- the wear is uniform over the whole of the flank of a tooth
- and all teeth are worn in the same way.

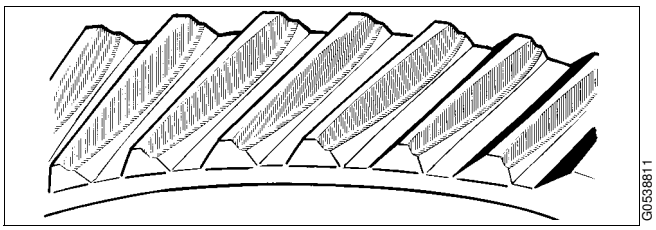

Worn teeth

Spalling

Small bits of the teeth have broken off, so-called spalling. This is generally due to excessive load or improper lubrication. Damage of this type need not necessitate immediate replacement, but careful checking at short intervals is imperative.

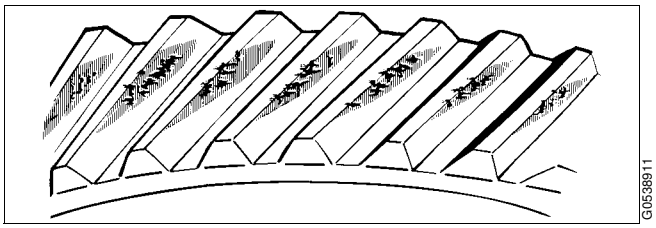

Spalling

Pitting

Small cavities in the teeth, so-called pitting, can occur through excessive load or improper lubrication. Damage of this type need not necessitate immediate replacement, but careful checking at short intervals is imperative.

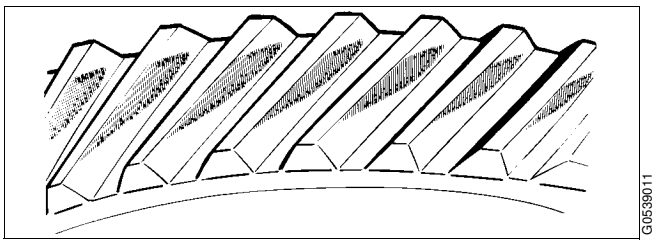

Pitting

5.4 Cleaning

5.4.1 External cleaning

The external cleaning of the frame and motor should be restricted to brushing, sponging or wiping while the motor is running or is still hot.

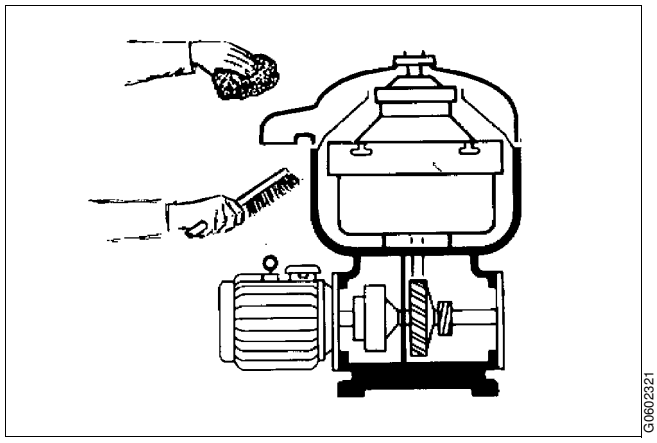

Use a sponge or cloth and a brush when cleaning

Never wash down a separator with a direct water stream.

Totally enclosed motors can be damaged by direct hosing to the same extent as open motors and even more than those, because:

- Some operators believe that these motors are sealed, and normally they are not.
- A water jet played on these motors will produce an internal vacuum, which will suck the water between the metal-to-metal contact surfaces into the windings, and this water cannot escape.
- Water directed on a hot motor may cause condensation resulting in short-circuiting and internal corrosion.

Be careful even when the motor is equipped with a protecting hood. Never play a water jet on the ventilation grill of the hood.

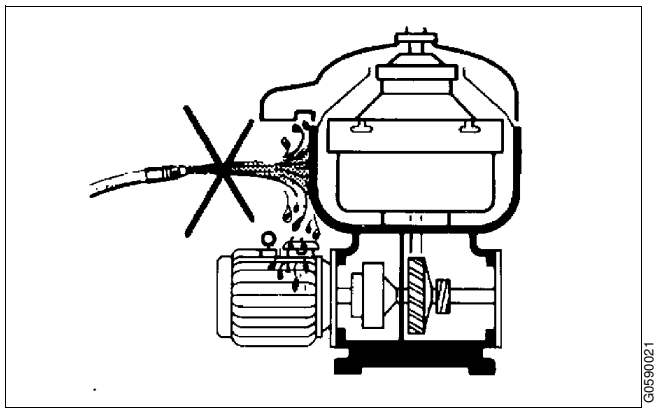

Never wash down a separator with a direct water stream or playing a water jet on the motor

5.4.2 Cleaning agents

When using chemical cleaning agents, make sure you follow the general rules and supplier's recommendations regarding ventilation, protection of personnel, etc.

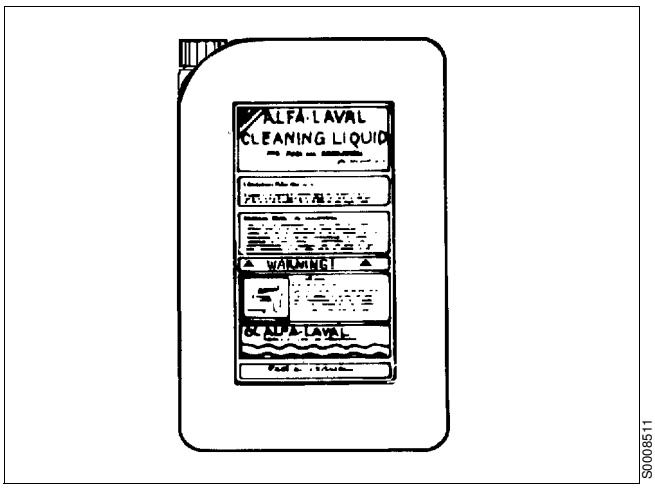

Alfa Laval cleaning liquid for lube and fuel oil separators is available in 25 litres plastic containers

For separator bowl, inlet and outlet

A chemical cleaning agent must dissolve the deposits quickly without attacking the material of the separator parts.

- For cleaning of **lube oil** separators the most important function of the cleaning agent is to be a good solvent for the gypsum in the sludge. It should also act as a dispersant and emulsifier for oil. It is recommended to use **Alfa Laval cleaning liquid for lube oil separators** which has the above mentioned qualities. Note that carbon steel parts can be damaged by the cleaning agent if submerged for a long time.
- **Fuel oil** sludge mainly consists of complex organic substances such as asphaltenes. The most important property of a cleaning liquid for the removal of fuel oil sludge is the ability to dissolve these asphaltenes.

  Alfa Laval cleaning liquid of fuel oil separators has been developed for this purpose. The liquid is water soluble, non-flammable and does not cause corrosion of brass and steel. It is also gentle to rubber and nylon gaskets in the separator bowl.Before use, dilute the liquid with water to a concentration of 3-5%. Recommended cleaning temperature is 50-70 °C.

CAUTION

Skin irritation hazard

Read the instructions on the label of the plastic container before using the cleaning liquid.

Always wear safety goggles, gloves and protective clothing as the liquid is alkaline and dangerous to skin and eyes.

For parts of the driving devices

Use white spirit, cleaning-grade kerosene or diesel oil.

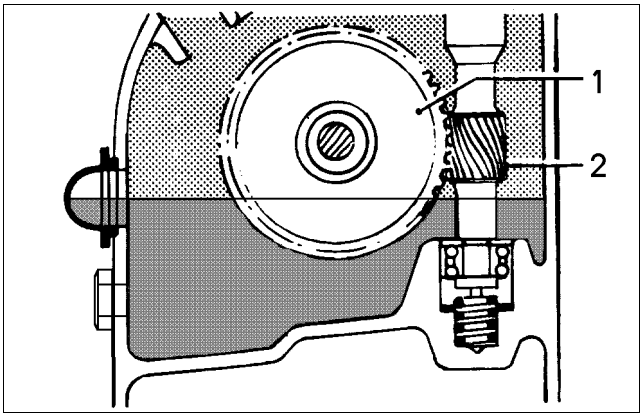

1. Worm wheel
2. Worm

Oiling (protect surfaces against corrosion)

Protect cleaned carbon steel parts against corrosion by oiling. Separator parts that are not assembled after cleaning must be wiped and coated with a thin layer of clean oil and protected from dust and dirt.

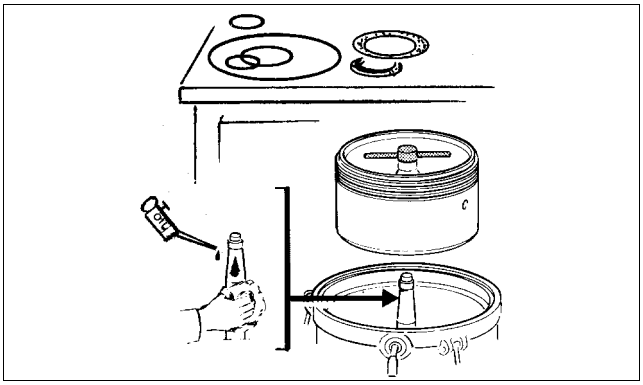

5.4.3 Cleaning of bowl discs

Bowl discs

Handle the bowl discs carefully so as to avoid damage to the surfaces during cleaning.

NOTE

Mechanical cleaning is likely to scratch the disc surfaces causing deposits to form quicker and adhere more firmly.

A gentle chemical cleaning is therefore preferable to mechanical cleaning.

1. Remove the bowl discs from the distributor and lay them down, **one by one**, in the cleaning agent.
2. Let the discs remain in the cleaning agent until the deposits have been dissolved. This will normally take between two and four hours.
3. Finally clean the discs with a **soft** brush.

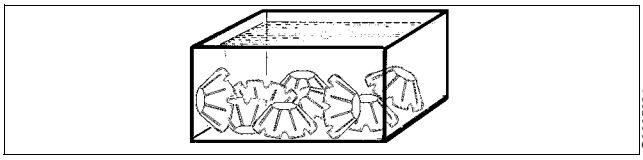

Put the discs one by one into the cleaning agent

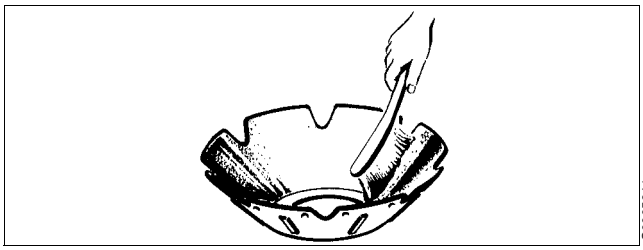

Clean the discs with a soft brush

CAUTION

Cut hazard

The discs have sharp edges.

5.5 When changing oil

Check at each oil change

Check the teeth of both the worm wheel and worm for wear, see “5.3.14 Worm wheel and worm; wear of teeth” on page 70.

5.5.1 Oil change procedure

NOTE

Before adding or renewing lubricating oil in the worm gear housing, the information concerning different oil groups, handling of oils, oil change intervals etc. given in “8.9 Lubricants” on page 149 must be well known.

1. Place a collecting tray under the drain hole, remove the drain plug and drain off the oil.

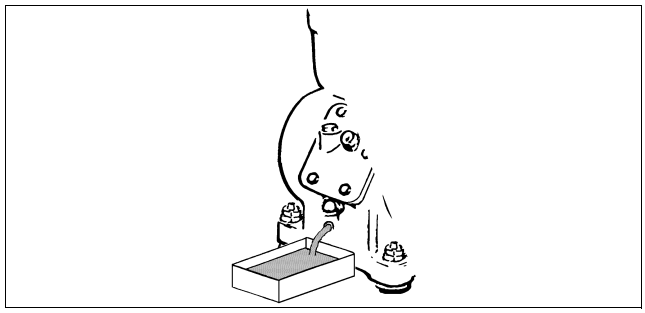

CAUTION

Burn hazards

Lubricating oil and various machine surfaces can be sufficiently hot to cause burns.

2. Fill new oil in the worm gear housing. The oil level should be slightly above middle of the sight glass.
   The correct oil volume is **0.8 litres**.

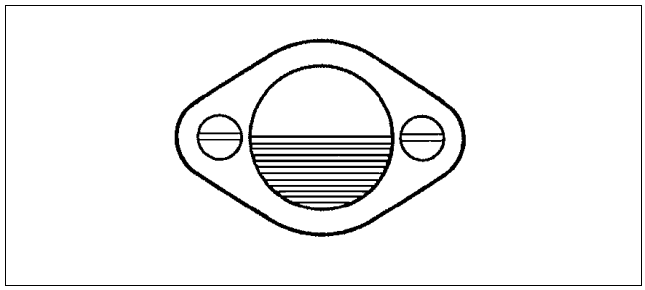

Check oil level

5.6 Common maintenance directions

5.6.1 Vibration

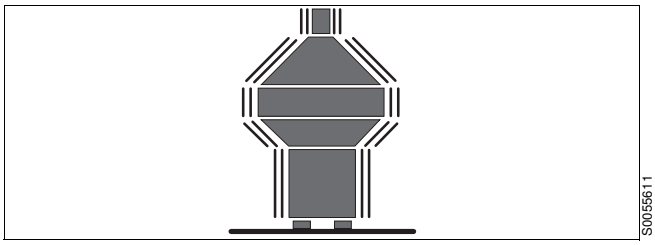

Vibration or noise often indicates that something is incorrect.

Use vibration analysis instrument to periodically check and record the level of vibration. See the illustration where to take measurements.

The level of vibration should not exceed 9.0 mm/s (RMS). Stop the separator and identify the cause.

If the separator begins to vibrate excessively during operation, proceed as described in “4.1.8 Emergency stop” on page 43.

5.6.2 Ball and roller bearings

Special-design bearings for the bowl spindle

The bearings used for the bowl spindle are special to withstand the speed, vibration, temperature and load characteristics of high-speed separators.

Only Alfa Laval genuine spare parts should be used.

A bearing that in appearance looks equivalent to the correct may be considerably different in various respects: inside clearances, design and tolerances of the cage and races as well as material and heat treatment.

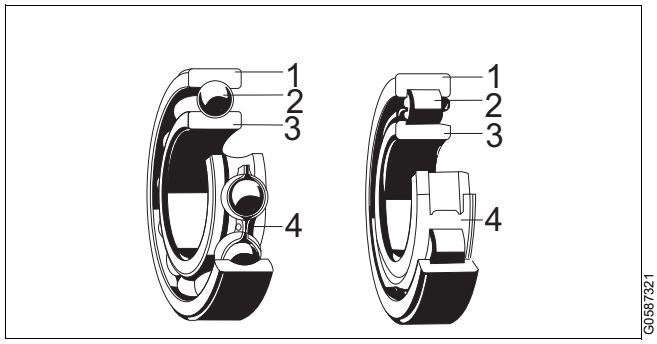

1. *Outer race*
2. *Ball/roller*
3. *Inner race*
4. *Cage*

> **NOTE**
> Using an incorrect bearing can cause a serious breakdown with damage to equipment as a result.
>
> Do not re-fit a used bearing. Always replace it with a new.

Dismantling

For bearings where no driving-off sleeve is included in the tool kit, remove the bearing from its seat by using a puller. If possible, let the puller engage the inner ring, then remove the bearing with a steady force until the bearing bore completely clears the entire length of the cylindrical seat.

The puller should be accurately centred during dismantling; otherwise, it is easy to damage the seating.

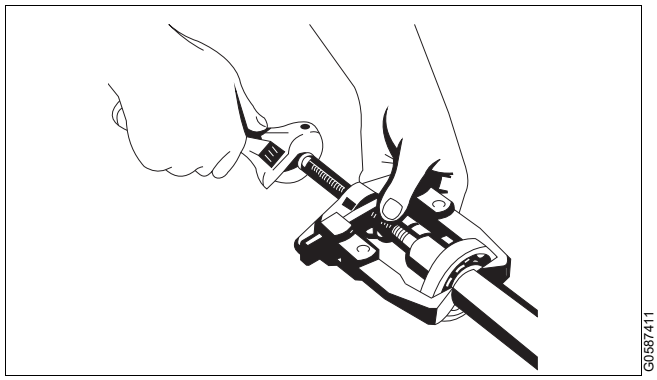

For bearings where no driving-off sleeve is included in the tool kit, use a puller when removing bearings

> **NOTE**
>
> Do not hit with a hammer directly on the bearing.

Cleaning and inspection

Check shaft (spindle) end and/or bearing seat in the housing for damage indicating that the bearing has rotated on the shaft (spindle) and/or in the housing respectively. Renew the damaged part(s), if the faults cannot be remedied by polishing.

Assembly

- Leave new bearings in original wrapping until ready to fit. The anti-rust agent protecting a new bearing should not be removed before use.
- Use the greatest cleanliness when handling the bearings.
- To facilitate assembly and also reduce the risk of damage, first clean and then lightly oil the bearing seating on shaft (spindle) or alternatively in housing, with a thin oil.

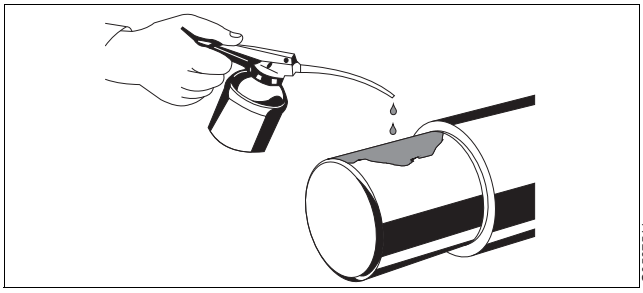

Clean and lightly oil the bearing seating before assembly

- When assembling ball bearings, the bearings must be heated in oil to **max. 125 °C**.

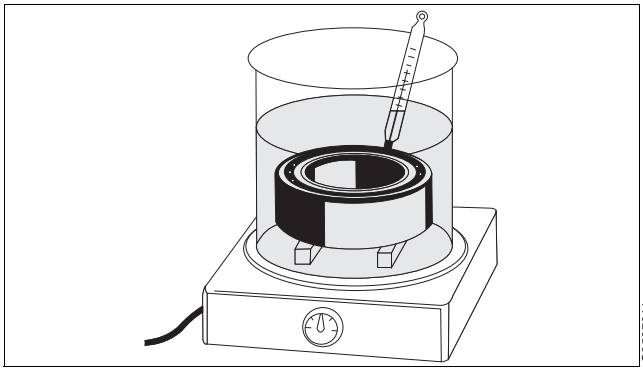

The bearing must not be in direct contact with the container

NOTE

Heat the bearing in a clean container.

Use only clean oil with a flash point above 250 °C.

The bearing must be well covered by the oil and not be in direct contact with the sides or the bottom of the container. Place the bearing on some kind of support or suspended in the oil bath.

WARNING

Burn hazards

Use protective gloves when handling the heated bearings.

- There are several basic rules for assembling cylindrical bore bearings:
  - Never directly strike a bearing's rings, cage or rolling elements while assembling. A ring may crack or metal fragments break off.
  - Never apply pressure to one ring in order to assemble the other.
  - Use an ordinary hammer. Hammers with soft metal heads are unsuitable as fragments of the metal may break off and enter the bearing.
  - Make sure the bearing is assembled at a right angle to the shaft (spindle).
- If necessary use a driving-on sleeve that abuts the ring which is to be assembled with an interference fit, otherwise there is a risk that the rolling elements and raceways may be damaged and premature failure may follow.

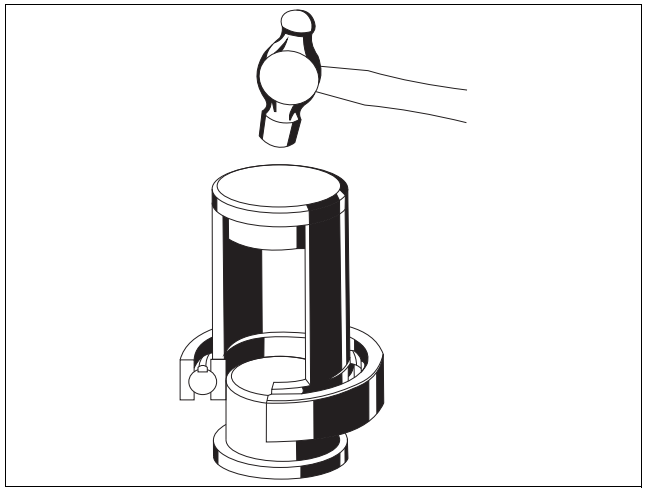

Use a driving-on sleeve for bearings that are not heated

5.6.3 Friction coupling

If the separator does not attain full speed within about 2 minutes, the friction elements or the coupling may be worn or greasy. The friction elements must then be replaced with new ones or thoroughly cleaned from grease.

Before the friction coupling is assembled, examine all parts thoroughly for wear and corrosion.

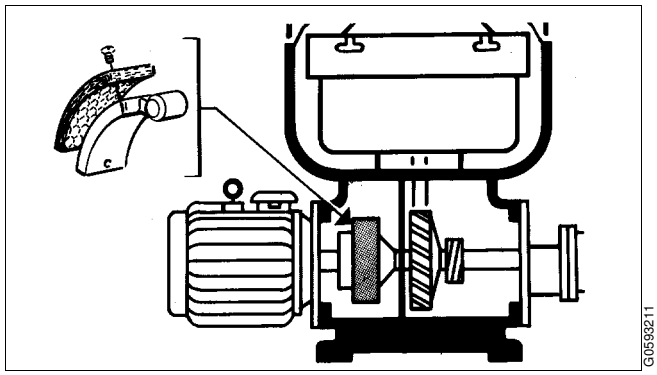

A worn coupling increase start-up time

CAUTION

Inhalation hazard

When handling friction blocks/pads use a dust mask to make sure not to inhalate any dust.

Do not use compressed air for removal of any dust. Remove dust by vacuum or wet cloth.

See Safety instructions for environmental issues regarding correct disposal of used friction blocks/pads.

5.6.4 Before shutdown

Before the separator is shutdown for a period of time, the following must be carried out:

- Remove the bowl, according to chapter “6 Dismantling/Assembly” on page 85.

NOTE

The bowl must not be left on the spindle during standstill for more than one week.

Vibration in foundations can be transmitted to the bowl and produce one-sided loading of the bearings. This can cause bearing failure.

- Protect cleaned carbon steel parts against corrosion by oiling. Separator parts that are not assembled after cleaning must be wiped and protected against dust and dirt.
- Protect the spindle taper from corrosion by lubricating it with oil.

5.6.5 Before start-up

- If the separator has been shut-down for more than 3 months but less than 12 months, an Intermediate Service (IS) has to be made. In addition to IS-service: Lubricate the top bearing with 10 mil. of lubricating oil.
- If the electric motor is equipped with grease nipples; pre-lubricate according to the instructions in “5.6.6 Lubrication of electric motor” on page 82 and the manufacturers information. See “8.9 Lubricants” on page 149 for type of grease.

  If the motor has no grease nipples, it is permanently lubricated. No action is needed.
- If the shut-down period has been longer than 12 months, a Major Service (MS) should be carried out.

5.6.6 Lubrication of electric motor

For motors equipped without permanently lubricated bearings, correct lubrication interval and recommended type of grease can be found in the manufacturer's instructions.

Manual lubrication

Regreasing while motor is running

- Remove grease outlet plug or open closing valve if fitted.
- Be sure that the lubrication channel is open.
- Press the specified amount of grease into the bearing.
- Let the motor run 1-2 hours to ensure that all excess grease is forced out of the bearing. Close the grease outlet plug or closing valve if fitted.

Regreasing while motor is at standstill

Regrease motors while running. If this is not possible, lubrication can be carried out while the machine is at a standstill.

- In this case, use only half the quantity of grease, then run the motor for a few minutes at full speed.
- When the motor has stopped, press the rest of the specified amount of grease into the bearing.

After 1-2 running hours close grease outlet plug or closing valve if fitted.

5.7 Lifting instructions

Alfa Laval ref. 558102, rev. 1

For lifting parts and assemblies of parts use lifting slings, working load limit (WLL): 300 kg.

Lifting the separator

1. Remove the separator bowl, see dismantling instructions in "6.2.1 Bowl" on page 88.
2. Attach endless slings or cables to the separator as illustrated. Check that the hinged bolts fixing the separator cover is tightened.
3. Lift and handle with care.

   Weight to lift: **220 kg**.

NOTE

Remove the separator bowl before lifting to prevent bearing damage.

WARNING

Crush hazards

A dropped separator can cause accidents resulting in serious injury to persons and damage to equipment.

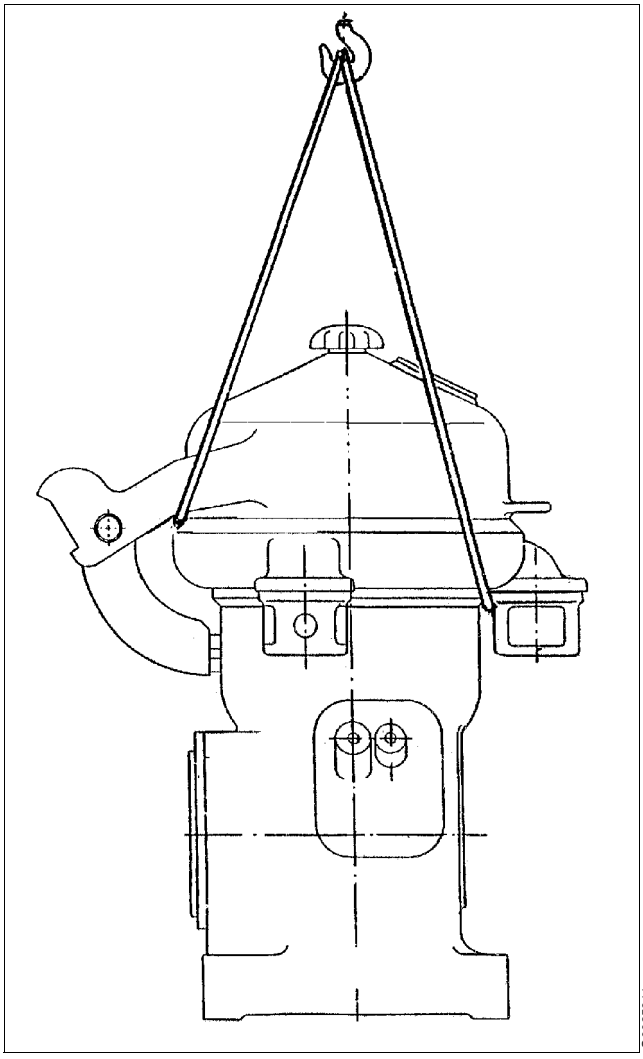

Do not lift the separator in any other way

6 Dismantling/Assembly

Contents

6.1 General 86

6.1.1 References to check points 86

6.1.2 Tools 86

6.1.3 Tightening of screws 86

6.2 Dismantling 87

6.2.1 Bowl 88

6.2.2 Vertical driving device 91

6.2.3 Horizontal driving device 94

6.3 Assembly 98

6.3.1 Horizontal driving device 99

6.3.2 Vertical driving device 102

6.3.3 Bowl 105

6.4 Feed and discharge pumps 108

6.4.1 General description 108

6.4.2 Dismantling 110

6.4.3 Assembly 114

6.5 Frame feet 118

6.5.1 Mounting of new frame feet 118

6.1 General

The parts must be handled carefully. Don't place parts directly on the floor, but on a clean rubber mat, fibreboard or a suitable pallet.

6.1.1 References to check points

In the text you will find references to the check point instructions in Chapter 5. The references appear in the text as in the following example:

✔ **Check point**
"5.3.4 Disc stack pressure" on page 61.

In this example, look up check point "5.3.4 Disc stack pressure" on page 61 for further instructions.

6.1.2 Tools

Special tools from the tool kit shall be used for dismantling and assembly. The special tools are specified in the *Spare Parts Catalogue.*

For lifting parts and assemblies of parts use lifting slings, working load limit (WLL): 300 kg.

6.1.3 Tightening of screws

When tightening screws, use the torques stated in the table below unless otherwise stated. The figures apply to lubricated screws tightened with a torque wrench.

METRIC THREAD		
Thread	Torques in Nm	
	Stainless steel	Carbon steel
M6	7	8
M8	17	20
M10	33	39
M12	57	68
M16	140	155
M20	275	325
M24	470	570

6.2 Dismantling

- To avoid accidental start, switch off and lock power supply.

WARNING

Entrapment hazards

Make sure that rotating parts have come to a **complete standstill** before starting **any** dismantling work.

The revolution counter indicates if separator parts are rotating or not.

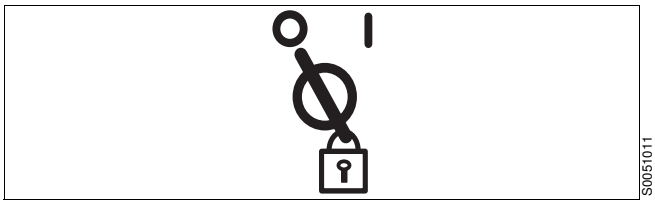

Lock power supply

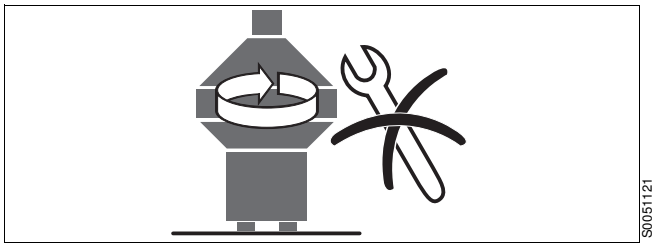

Do not dismantle any parts before complete standstill

6.2.1 Bowl

1. Be sure the bowl has stopped rotating.

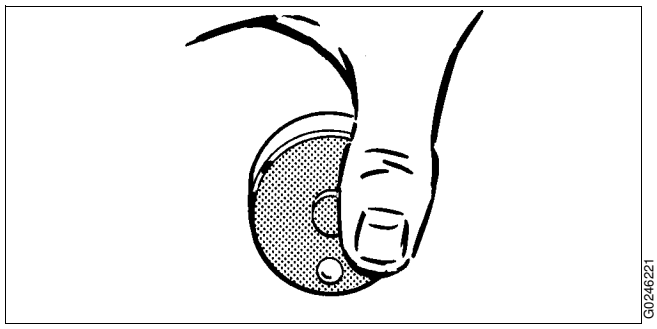

Revolution counter indicates rotation

2. Loosen the hook bolts and remove the collecting cover.

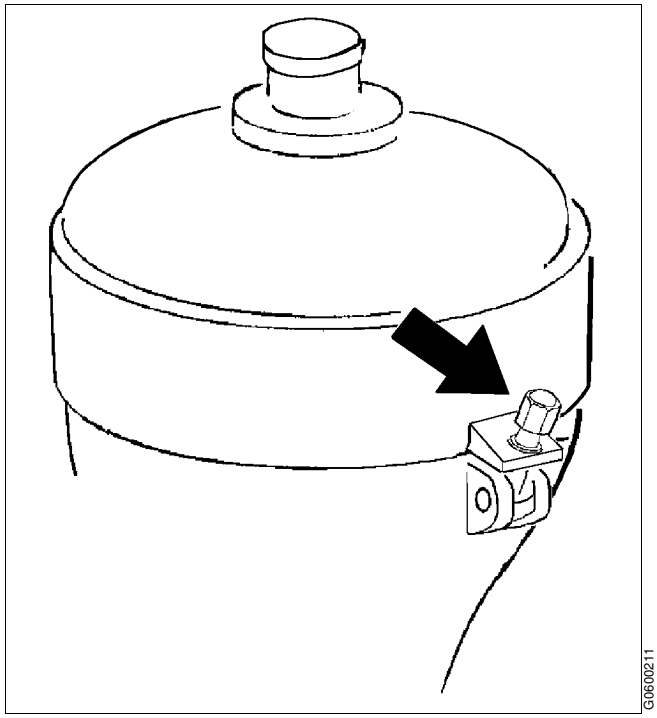

Hook bolts

3. Tighten both lock screws.

   The bowl parts can remain hot for a considerable time after the separator has come to a standstill.

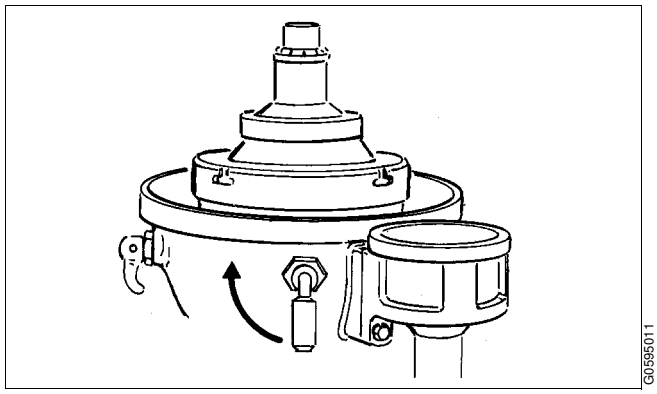

Tighten both lock screws

4. Unscrew the small lock ring by using the special tool, “Spanner for small lock ring”.

   Left-hand thread!

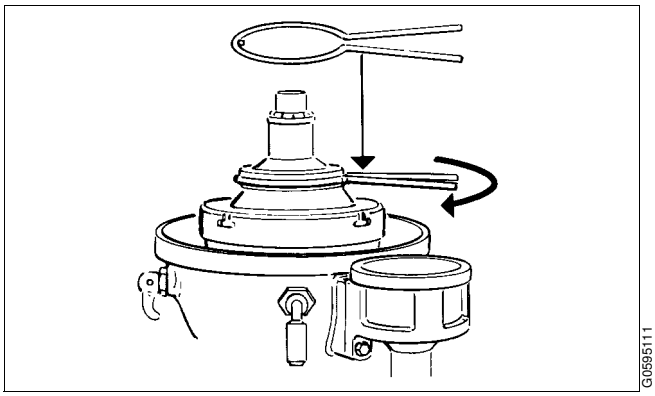

Small lock ring

5. Unscrew the large lock ring by using the special tool; “Spanner for lock ring” and a tin hammer.

   Left-hand thread!

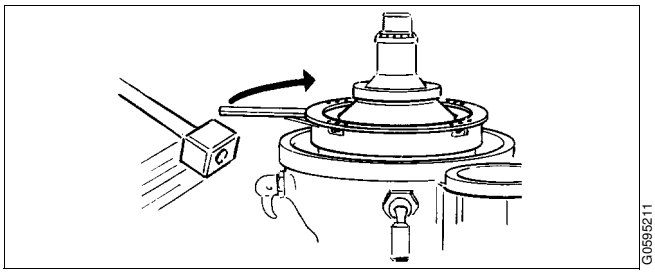

Large lock ring

6. Lift off gravity disc.

   Note! If the gravity disc has to be replaced owing to changed operating conditions.

   Lift out the top disc, disc stack and distributor.

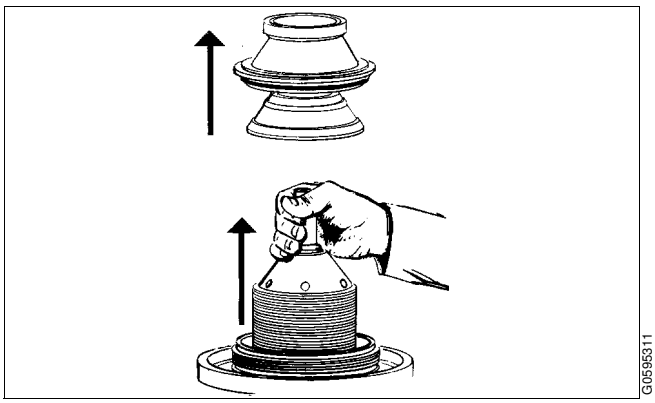

CAUTION

Cut hazard

Sharp edges on the separator discs may cause cuts.

7. Unscrew the cap nut.

   Release the two lock screws.

   Lift out the bowl body using the hand tool.

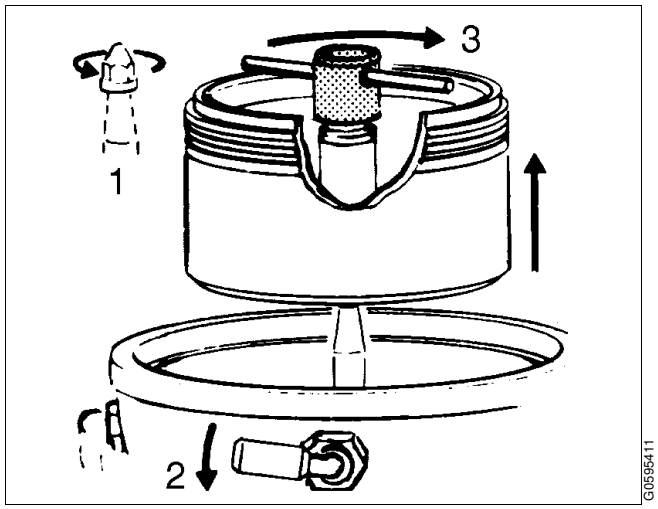

1. Cap nut
2. Both lock screws
3. Lift bowl body from spindle

8. Soak and clean all parts thoroughly in suitable cleaning agent, see “5.4 Cleaning” on page 72.

   Remove O-rings and renew them with spares from the Major Service kit.

✔ **Check point**
“5.3.1 Corrosion” on page 57,
“5.3.2 Erosion” on page 59,
“5.3.3 Cracks” on page 60.

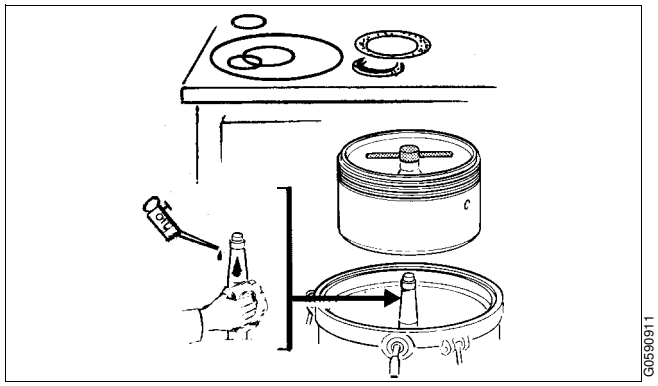

6.2.2 Vertical driving device

Remove the outlet housings, feed and discharge pumps and raise the collecting cover. Remove also the separator bowl.

Before dismantling, in the case of 8000 hours service, or if the separator vibrates while running:

✔ **Check point**
"5.3.6 Radial wobble of bowl spindle" on page 63.

1. Drain off the oil

   Force out the conical pin of the worm wheel.

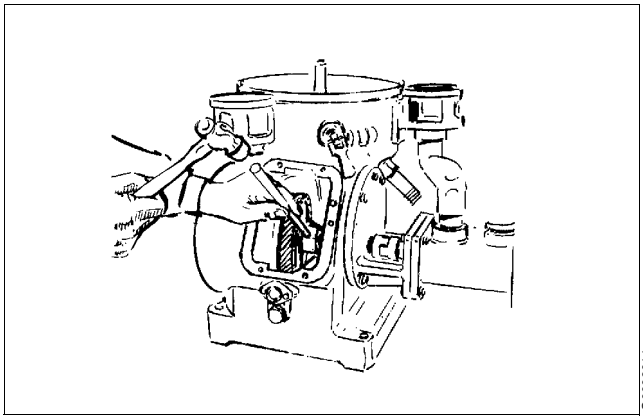

2. Push worm wheel aside.

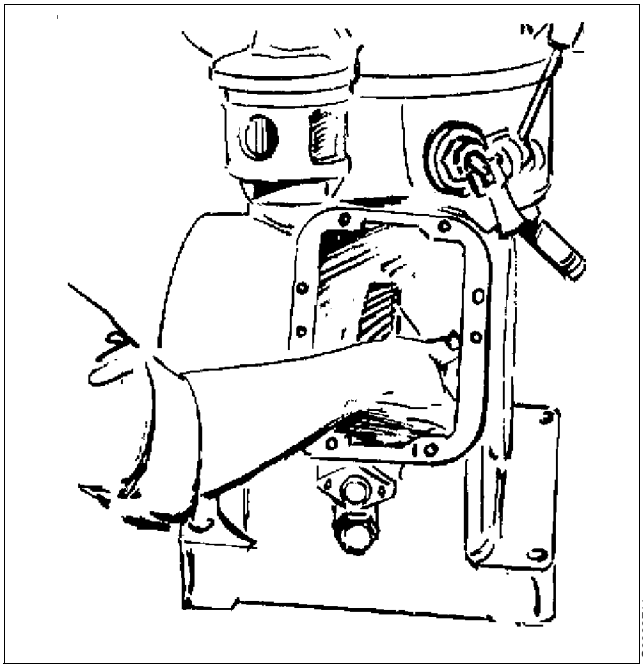

3. Loosen the spring casing.

   Fit the cap nut to shaft top and lift out the vertical driving device.

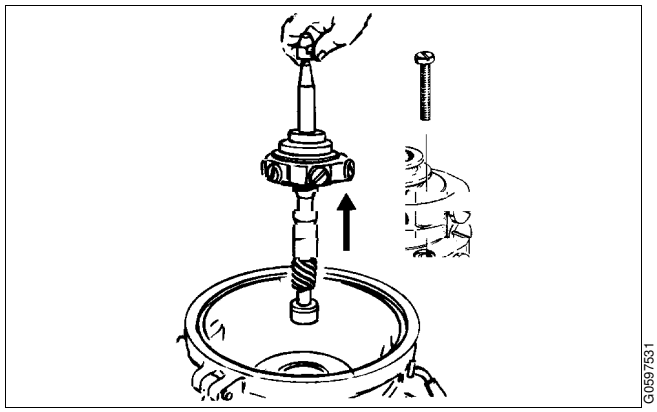

4. Loosen the buffers and remove housing.

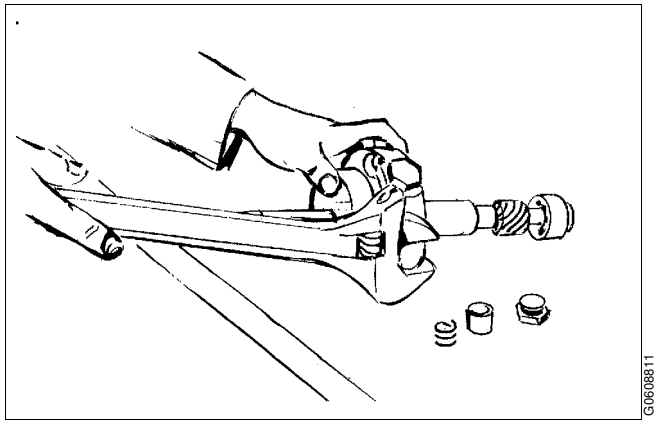

5. Remove the collar.

   Left-hand thread!

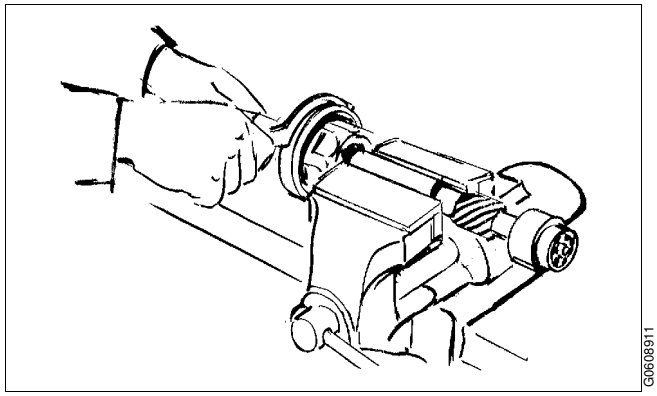

6. Use the puller tool to dismantle the upper ball bearing.

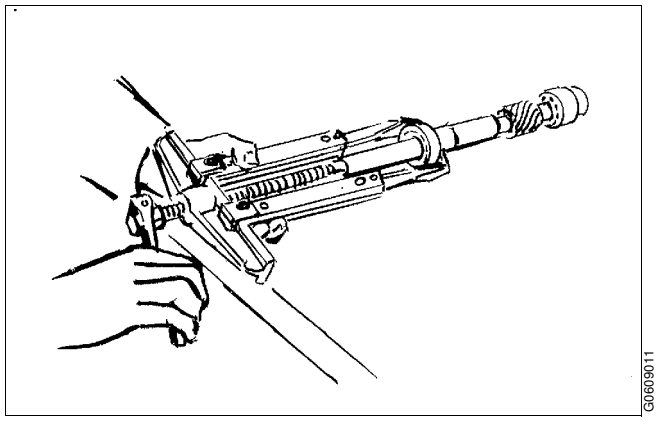

7. Remove the snap ring.

WARNING

Risk for eye injury by flying snap ring

Use the correct pliers for dismantling and assembly of snap ring to avoid accidental release.

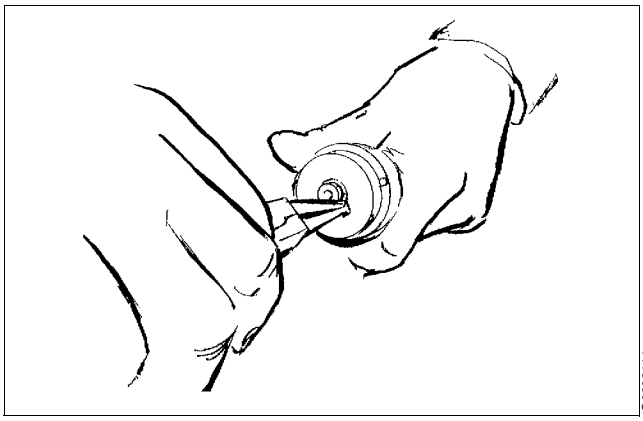

8. Remove the ball bearing sleeve together with thrust ball bearing and height adjusting ring(s).

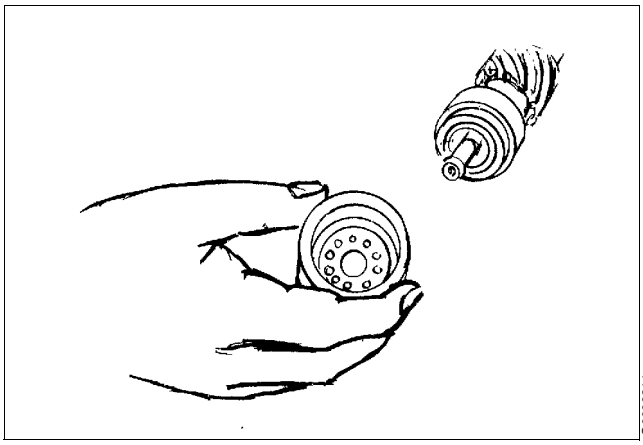

9. Pull off lower ball bearing gently.

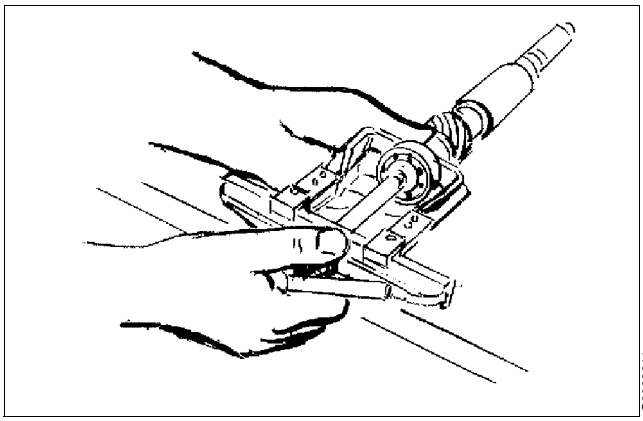

6.2.3 Horizontal driving device

1. Drain gear housing from oil see “5.5.1 Oil change procedure” on page 76. Remove guard for worm wheel and force out the conical pin in worm wheel.

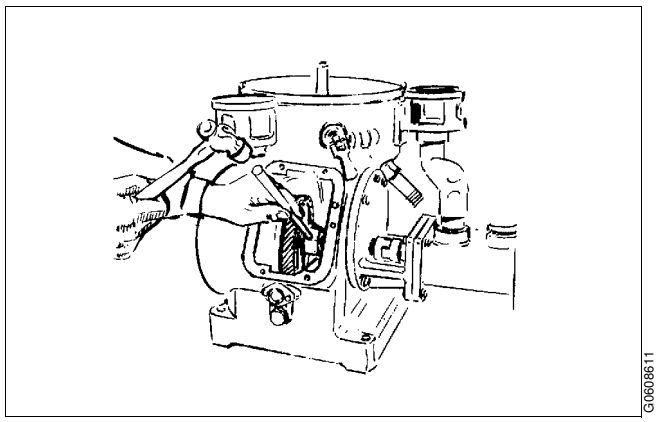

2. Remove lock ring, sight glass and seal ring (valid for machine with feed and discharge pump).
   For machine without pump go to point 5.

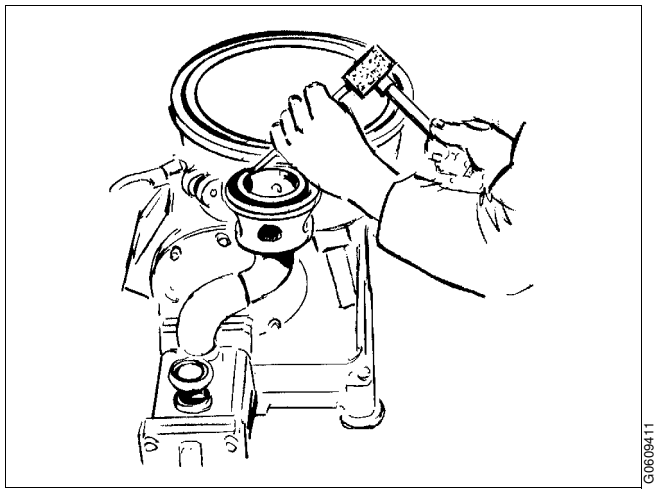

3. Loosen screws of inspection box.

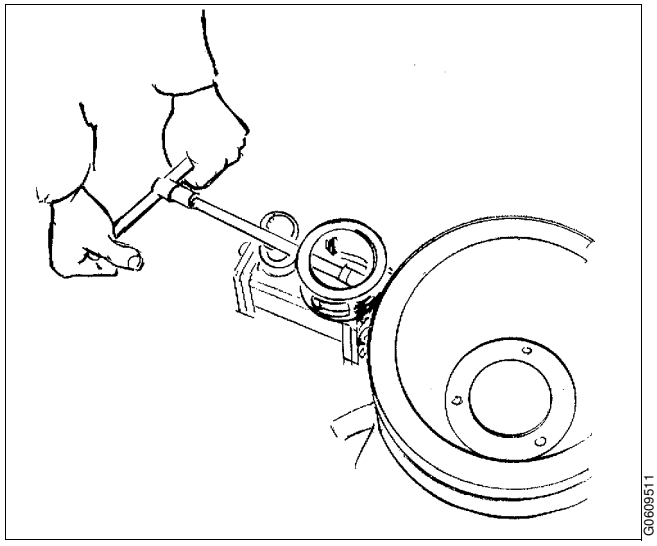

4. Remove coupling guard and force out the tubular pin in coupling half on horizontal driving shaft.

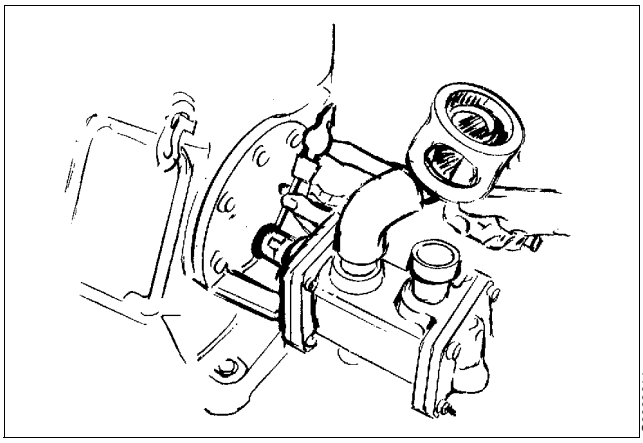

5. Loosen end shield. Remove pump together with inspection box.

   For machine without pump: Loosen and remove guard. Force out the pin at shaft end and remove space sleeve.

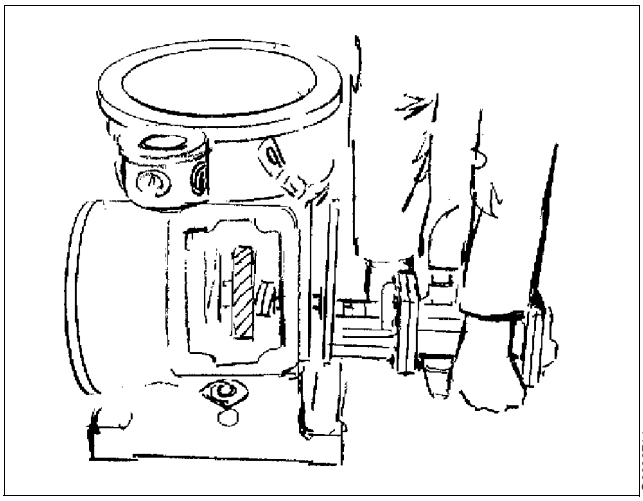

6. Remove the motor.

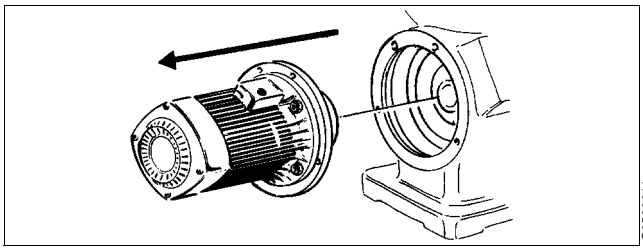

CAUTION

Inhalation hazard

When handling friction blocks/pads use a dust mask to make sure not to inhalate any dust.

Do not use compressed air for removal of any dust. Remove dust by vacuum or wet cloth.

See Safety instructions for environmental issues regarding correct disposal of used friction blocks/pads.

7. Renew the pads on the friction blocks.

   When refitting the blocks make sure the arrow on each block points-in the same direction of rotation See the arrow on the frame.

   Secure the blocks with washer and split pin.

   If the friction elements are worn: Fit new ones.

   Renew all friction elements even if only one is worn.

   If the friction elements are only greasy: Clean the friction elements and the inside of the coupling drum with a degreasing agent.

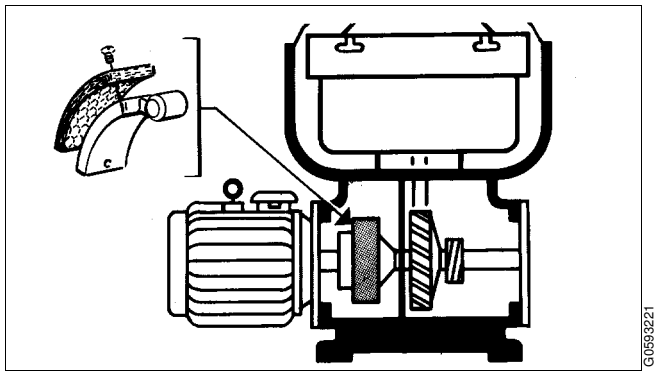

8. Loosen the three screws holding the sealing washer.

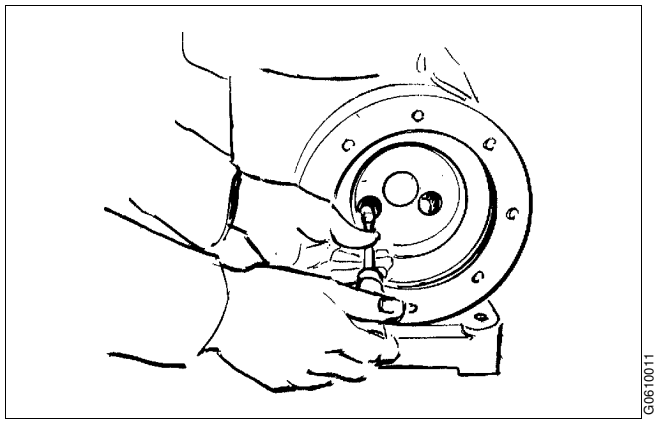

9. Knock gently on shaft end to get the bearings out of their seats. Then use the worm wheel to knock off bearing from shaft. Remove bearing and worm wheel.

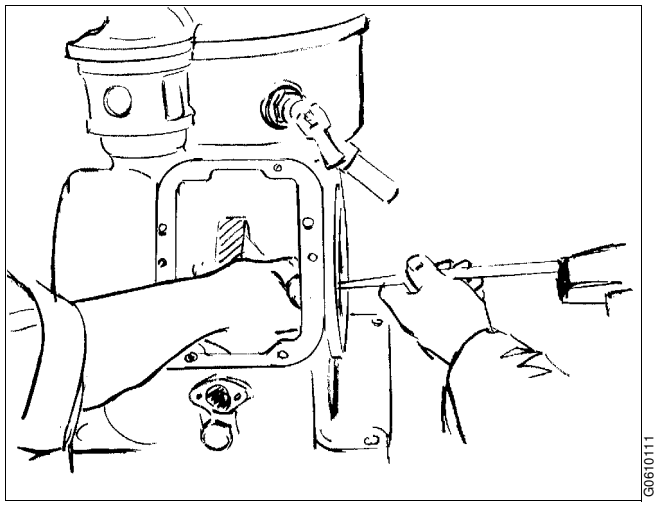

10. Remove the horizontal driving shaft

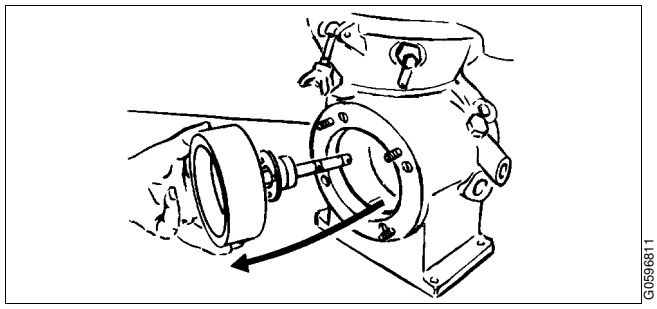

11. Use the puller tool to pull off the protecting cover and ball bearing. Protect end of worm wheel shaft with a washer.

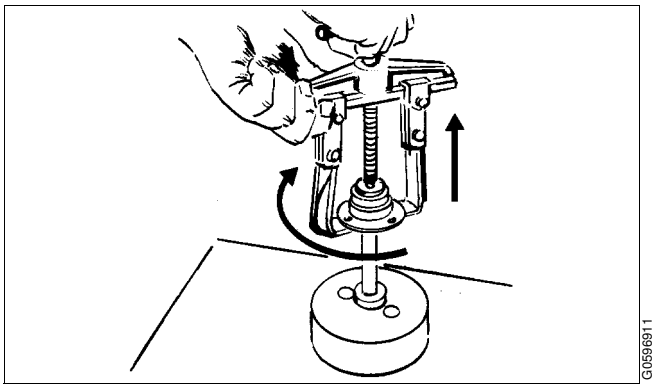

6.3 Assembly

Clean all parts in a degreasing agent and renew parts supplied in the Spare parts kits.

✔ **Check point**
“5.3.1 Corrosion” on page 57,
“5.3.2 Erosion” on page 59,
“5.3.3 Cracks” on page 60,
“5.3.12 Top bearing springs” on page 69,
“5.3.13 Ball bearing housing” on page 69,
“5.3.14 Worm wheel and worm; wear of teeth” on page 70.

6.3.1 Horizontal driving device

1. Fit protection cover on worm wheel shaft. Heat bearing in oil before mounting onto shaft.

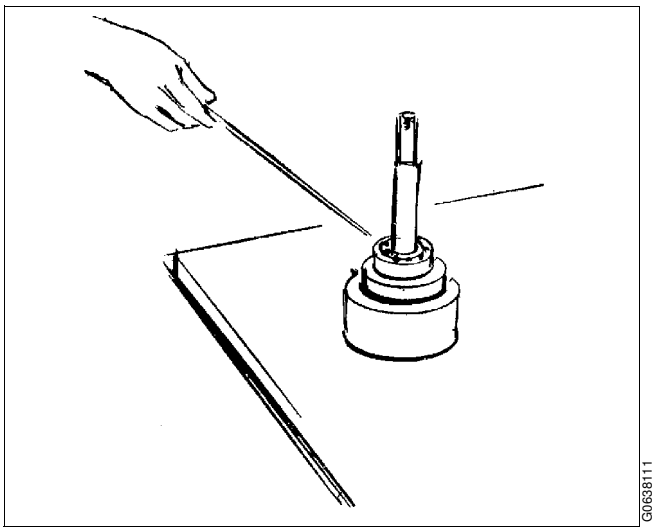

2. Clean the ball bearing housing in the frame and oil the outer race of the ball bearing.

   Fit the gasket and enter the shaft through the bearing seat in the frame.

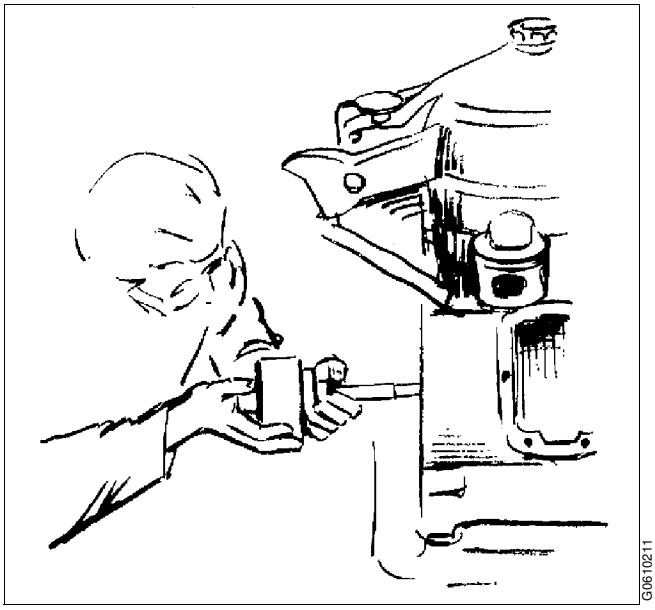

3. Enter the worm wheel on shaft and force the worm wheel shaft to its position in the frame, so that the ball bearing enters correctly into its seat.

   Observe that largest ends of the holes for conical pin in shaft and worm wheel should point in same direction.

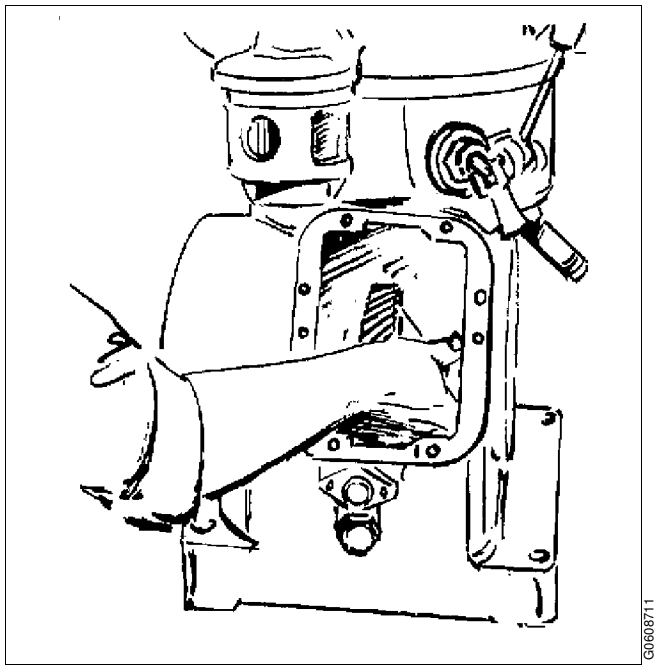

WARNING

Disintegration hazard

When replacing the gear, always make sure that the new worm wheel and worm have the same number of teeth as the old ones.

4. Secure the protection cover with the three screws.

   Fit the ‘loose’ ball bearing. Secure the worm wheel with the conical pin.

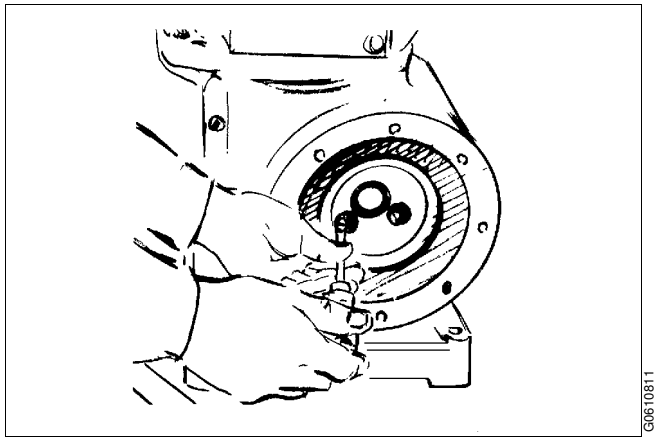

5. Lift the motor in position and tighten the motor bolts.

   If the coupling disc has been loosened without first marking its position on the motor shaft, the correct position for position of coupling disc must be determined again.

✔ **Check point**
"5.3.9 Coupling disc of motor" on page 66.

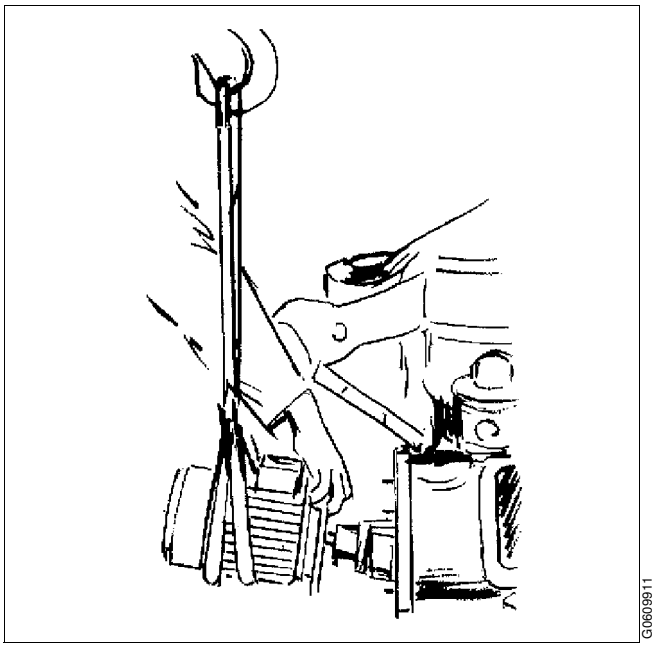

> **WARNING**
>
> **Disintegration hazards**
>
> When power cables have been connected, always check direction of rotation. If incorrect, vital rotating parts could unscrew causing disintegration of the machine.

6. Fit coupling half on worm wheel shaft before mounting the pump.Remember the gasket.

   Fit the coupling guard with two screws.

   For machine **without pump** fit distance sleeve and pin at the end of horizontal shaft. Fit and secure the guard.

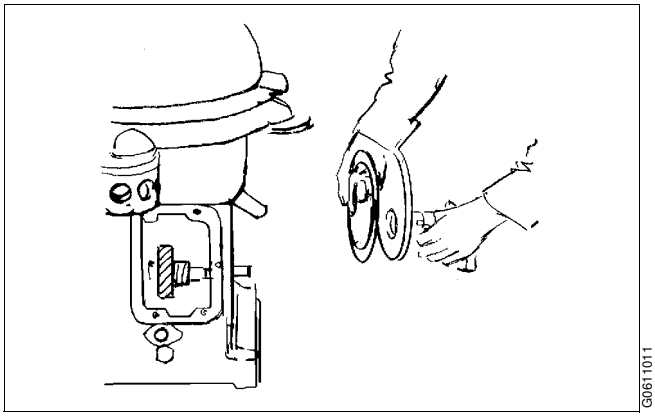

6.3.2 Vertical driving device

Before assembling the bowl spindle, make sure the relevant checks have been carried out.

Wipe off and oil the bearing seat before fitting the ball bearing.

Inspect the tapered end of the bowl spindle and assemble ball bearings.

Heat the new ball bearings in oil to **max. 125 °C**.

NOTE

Always fit new bearings.

If any doubt how to mount roller bearings in a correct way, see the detailed description in chapter “5.6.2 Ball and roller bearings” on page 78.

G0587611

1. Fit the two bearings onto the shaft.

CAUTION

Burn hazards

Use protective gloves when handling the heated bearings.

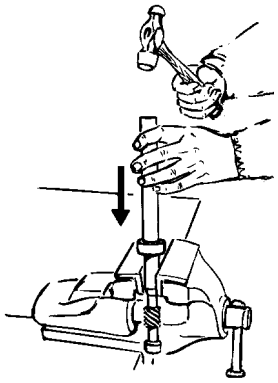

G0597411

2. Fit ball bearing housing and throw-off collar.
   Left-hand thread!

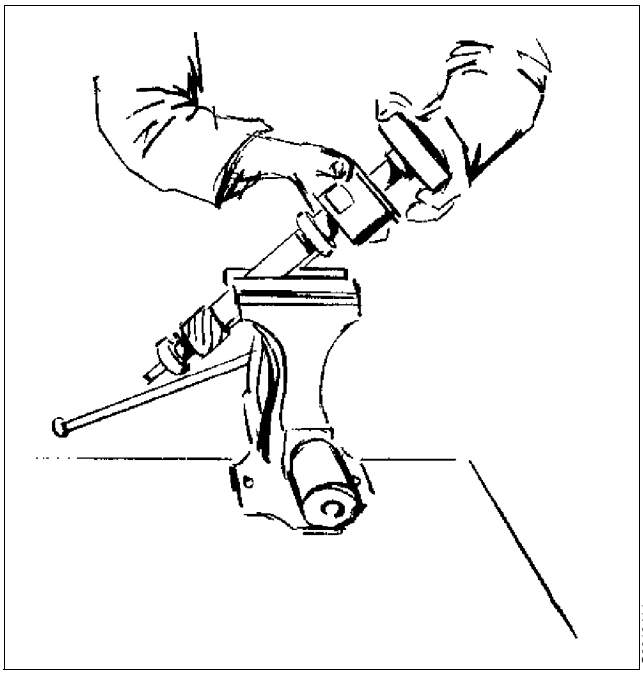

3. Fit the ball bearing sleeve together with thrust bearing and height adjusting ring.

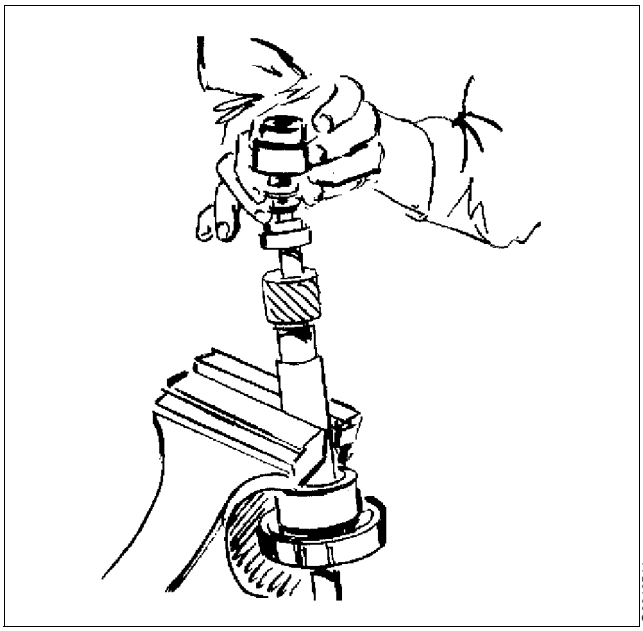

4. Secure the assembly with the snap ring.

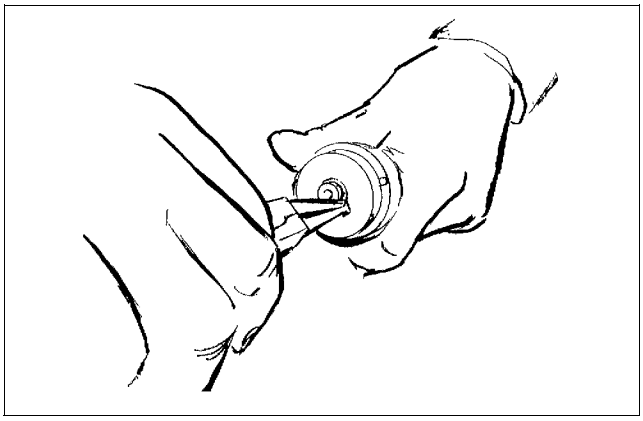

WARNING

Risk for eye injury by flying snap ring

Use the correct pliers for dismantling and assembly of snap ring to avoid accidental release.

5. Place spring casing to rest on shoulder of upper ball bearing housing. Fit buffers and springs into casing. Tighten the caps.

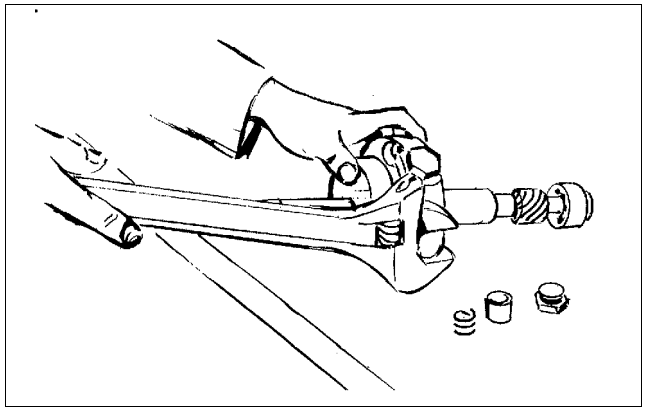

6. Place the gasket in the right position at the bottom of the separator frame.
7. Fit the cap nut to the spindle and lower the assembly into the separator frame. Fit the washers and tighten the three screws.

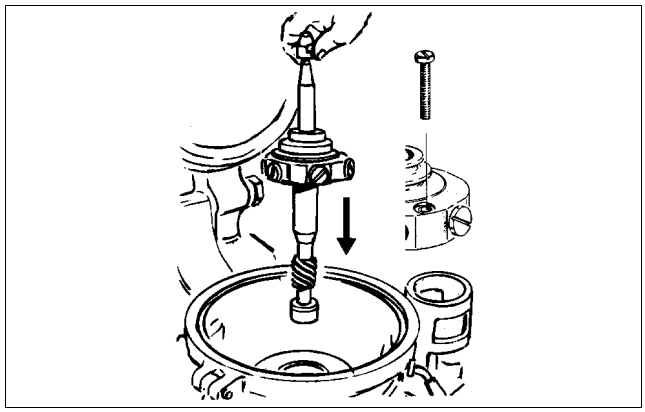

6.3.3 Bowl

Make sure that the check points are carried out before and during assembly of the separator bowl.

✔ **Check points**
"5.3.8 Bowl spindle cone and bowl body nave" on page 65.

1. Wipe off spindle top and nave bore in the bowl body. Apply a few drops of oil onto the taper, smear it over the surface and wipe it off with a clean cloth.

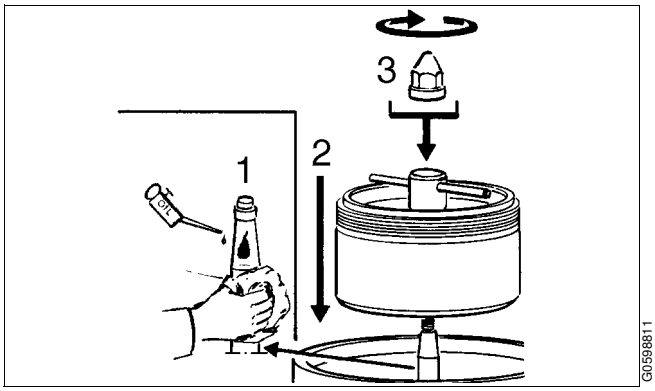

2. Fit the distributor with the disc stack.

   Fit the top disc and bowl hood.

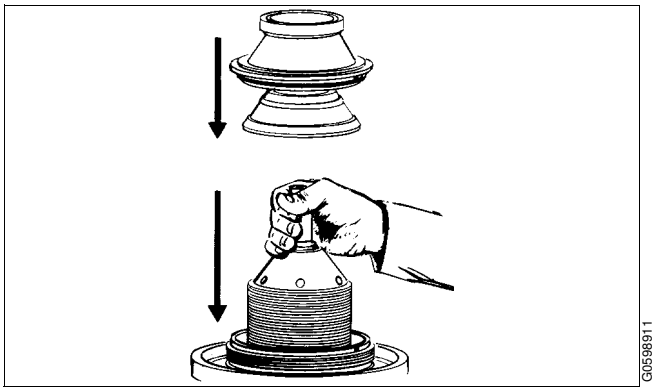

3. Make sure the guides are in correct position.

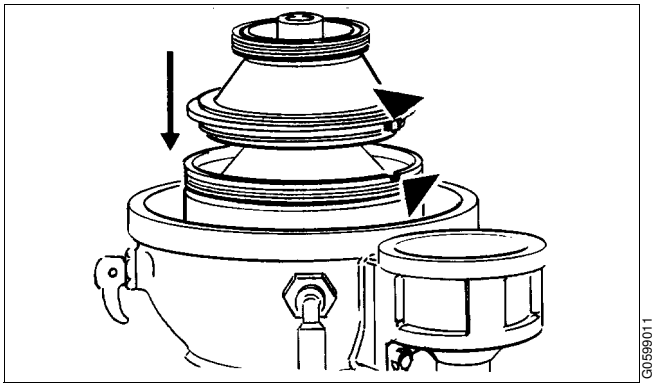

4. Secure the bowl from rotating. Screw in **both** lock screws.

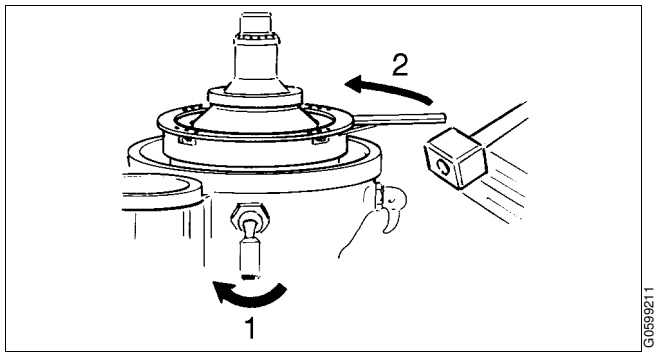

5. Degrease lock ring threads, contact and locating faces (see arrows above). Apply Molykote 1000 paste to the threads and faces stated.

   Brush in the paste according to the manufacturer's direction.

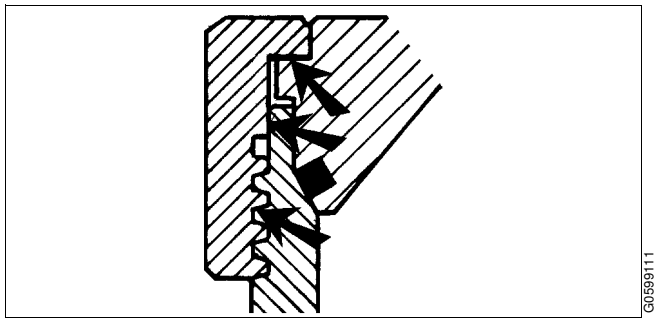

6. Tighten lock ring counter-clockwise (left-hand thread) until bowl hood lies tightly against bowl body (in a new bowl marks will now be in line with each other.

   Left-hand thread!

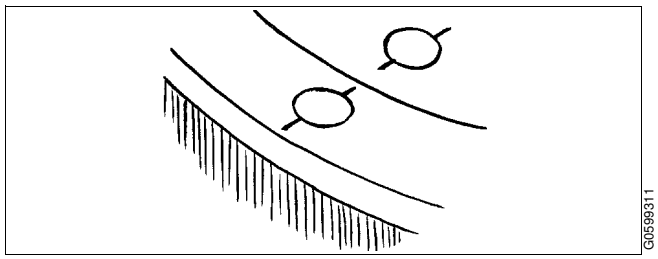

WARNING

Disintegration hazard

The assembly mark on the lock ring must never pass the mark on the bowl hood by more than 25° (or 45 mm).

✔ **Check point**

"5.3.4 Disc stack pressure" on page 61.

7. Release both lock screws and tighten clamp bolts.

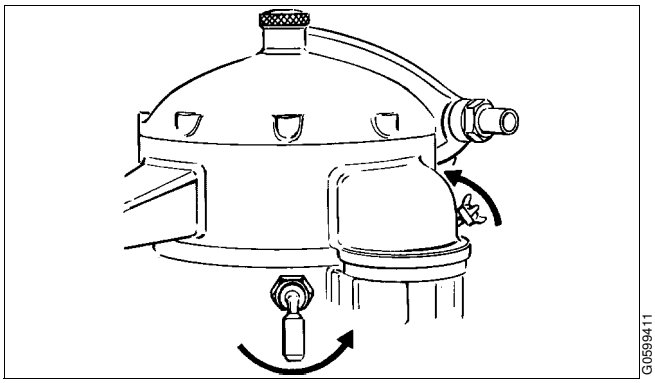

NOTE

The two lock screws must be fully released to prevent risk of damage to bowl body.

8. Fit the connecting hoses if they have been removed. Make sure to fit their gasket rings

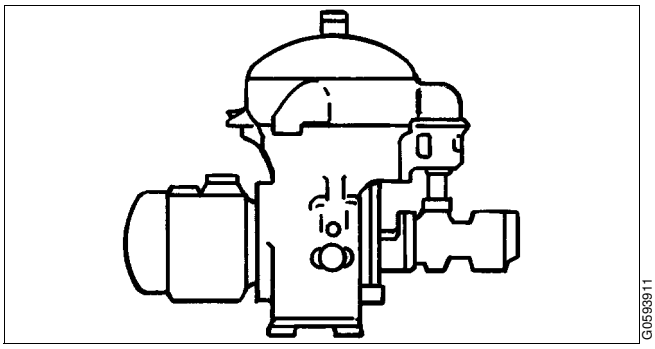

6.4 Feed and discharge pumps

6.4.1 General description

1. Relief/safety valve:

   Examine valve cone and valve seat.

2. Bushings:

   Renew the bushings if they are scratched or there is a play between shaft and bushing.

3. Wearing seals:

   Renew the seals if the surface is rough, crackled or dented by the impeller.

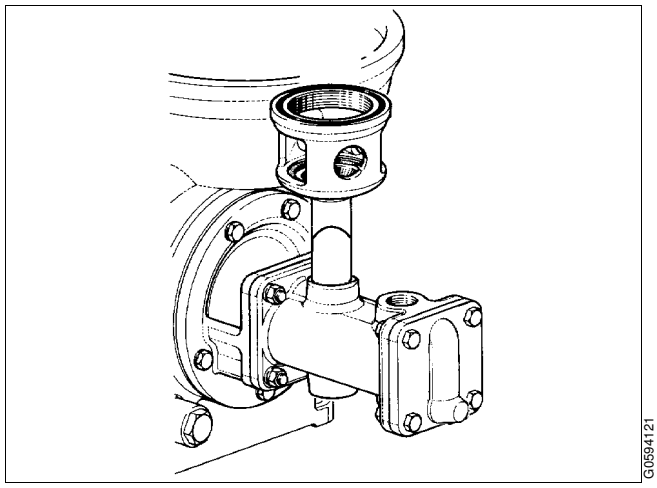

Double pump

4. Lipseal rings:

   Renew the rings at the annual overhaul. **Important!** Turn the rings the right way round.

5. Flexible coupling:

   Check wear on flexible element.

6. Impeller shaft:

   Check wear on sealing surface on the impeller shaft.

7. Disengagement:

   The feed pump can be disengaged by turning the impeller (6), thereby placing the driving blade of the impeller in the recess of the shield.

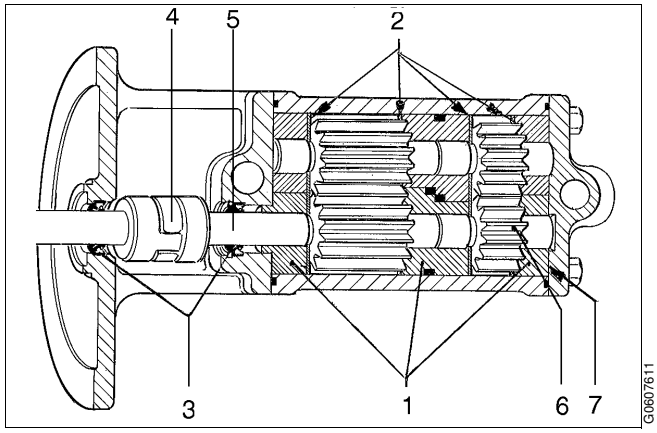

1. *Bushings*
2. *Wearing seals*
3. *Lipseal rings*
4. *Flexible coupling*
5. *Impeller shaft*
6. *Disengagement*
7. *Axial play*

8. Axial play:

   The total axial play (1) must be 0.1 - 0.3 mm. If the play is too large even though the wearing seals have been renewed, it can be compensated by adding a brass leaf liner.

   Insert the liner at (2). If the play is too small, grind off the bearing holder (3).

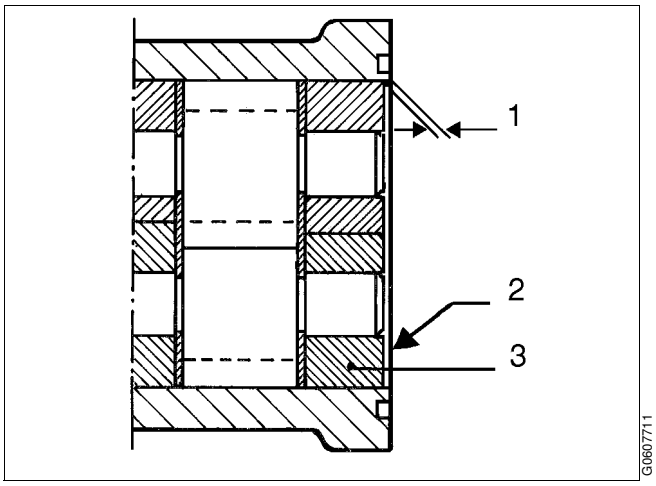

Axial play 0.1 - 0.3 mm

6.4.2 Dismantling

1. Remove the pipe connections of the pump.

   Screw off the lock ring of the sight glass.

   Remove the upper gasket and the sight glass.

   Remove the screws of the control housing.

   Lift the control housing with the lower gasket and the connecting piece.

   Unscrew the oil drain plug and empty the gear housing of oil.

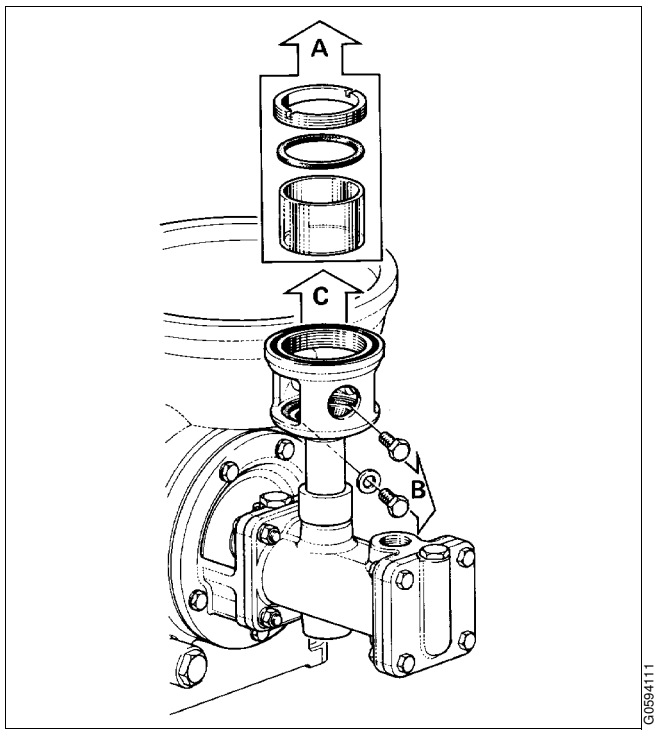

2. Remove the guard over the flexible coupling.

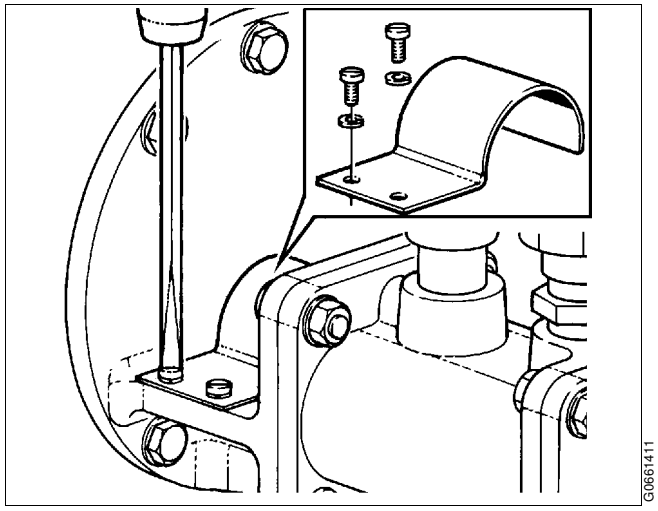

3. Drive out the tubular pins from the worm wheel shaft and impeller shaft. Turn the bowl by hand until the pins are in a convenient position.

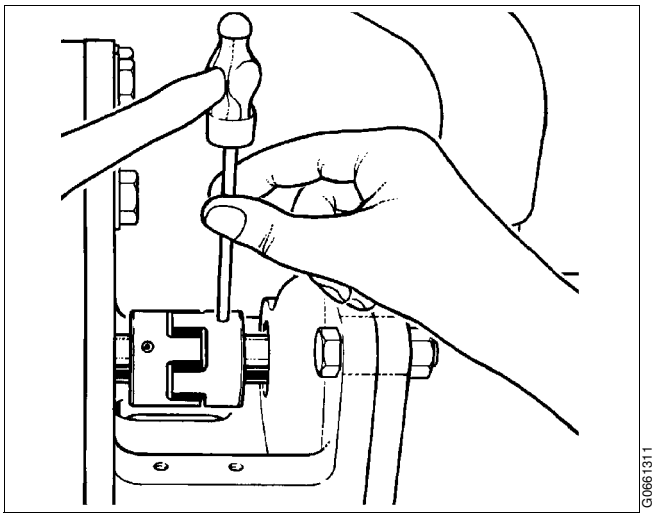

4. Undo the four screws holding the pump shield, remove shield.

   Do not lose the valve cone and spring.

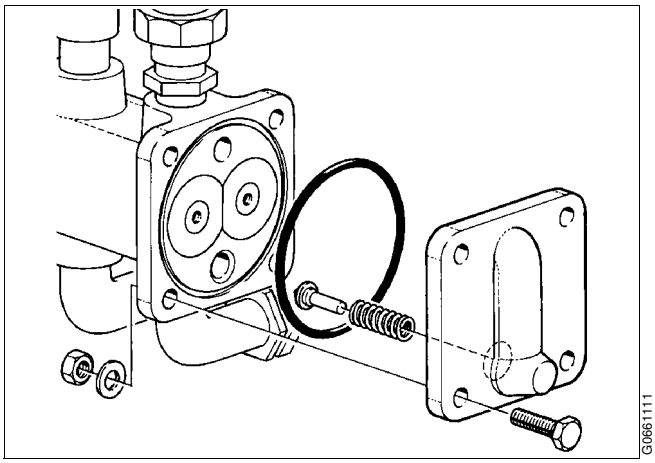

5. Insert two screws into the centre hole of the impellers. Use the screws as a handle to withdraw the impellers.

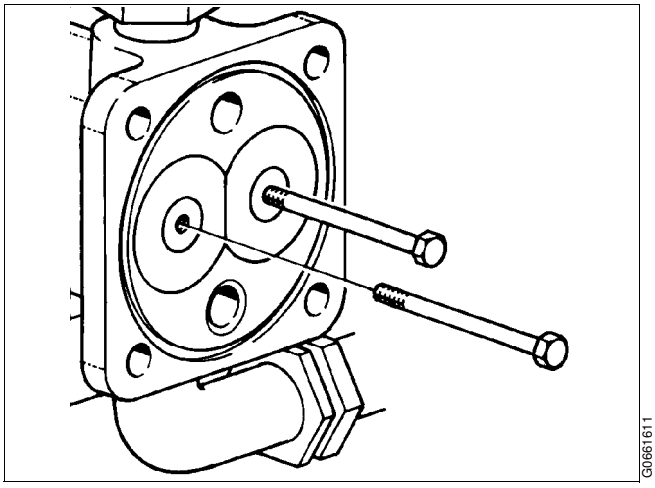

6. Remove the impellers for inlet pump.

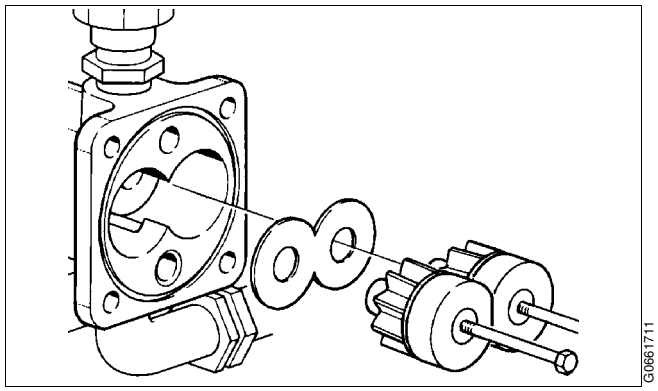

7. Repeat step 5 and 6 for the outlet pump impellers.

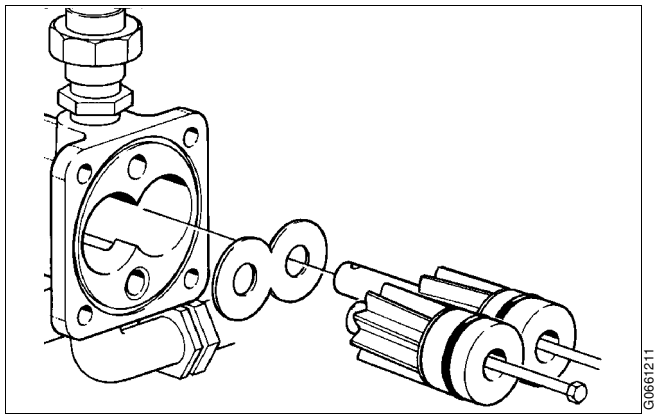

8. Undo the four screws holding the pump housing. Remove housing, do not lose valve cone and spring.

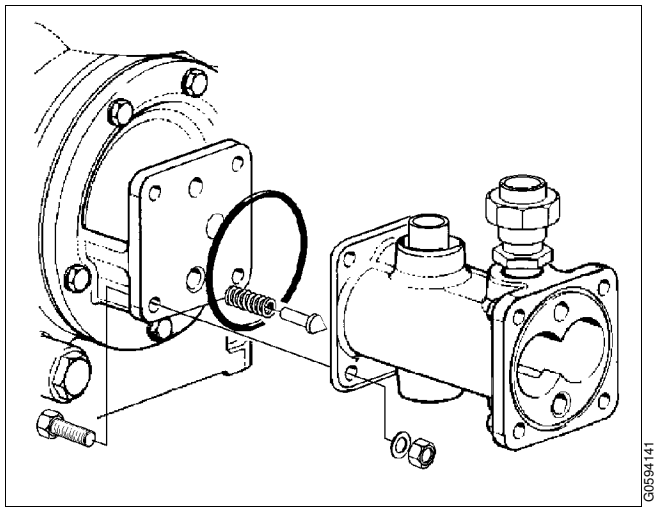

9. Check that the lip seal rings are in good condition.
   If the seal rings are worn or damaged:
   Remove the pump shield from the separator frame, knock out the old seal ring(s) and replace them.

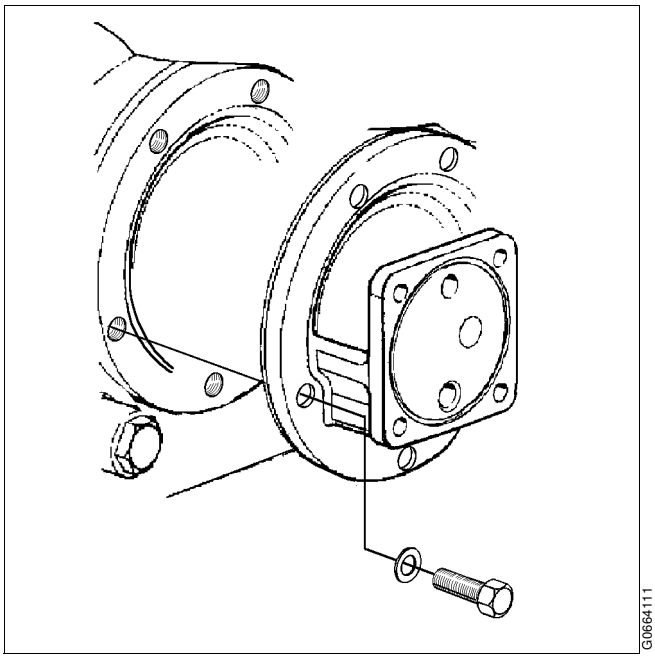

6.4.3 Assembly

1. Fit new lip seal rings. Be sure to turn it the right way around, the closed side should point outwards to air. Start with the one at pumpside of the shield.

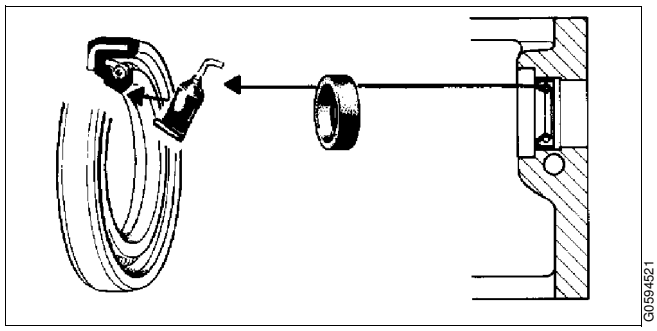

2. Lift pumpshield in place and secure it with one screw at top of shield, do not tighten it fully. Be careful not to damage the seal ring when entering the worm wheel shaft.

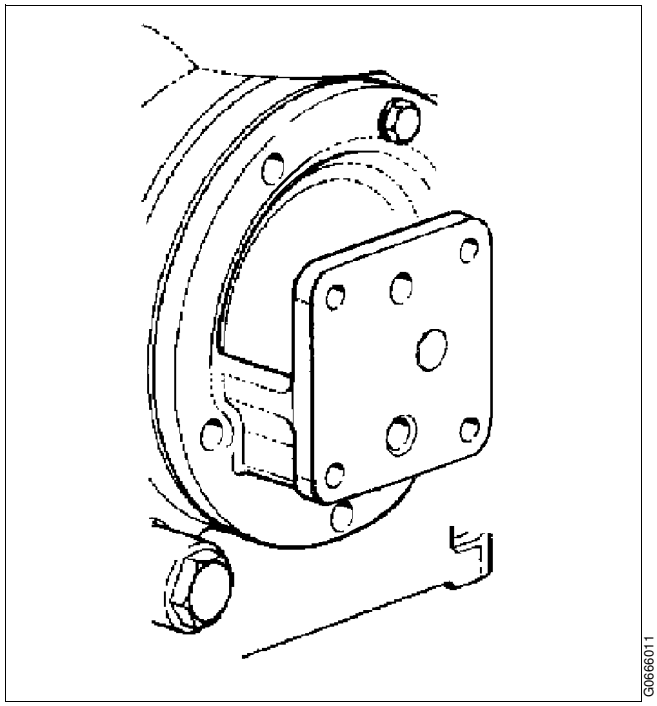

3. Fit and secure the coupling half with the larger pinhole on worm wheel shaft. Put the flexible element in place.

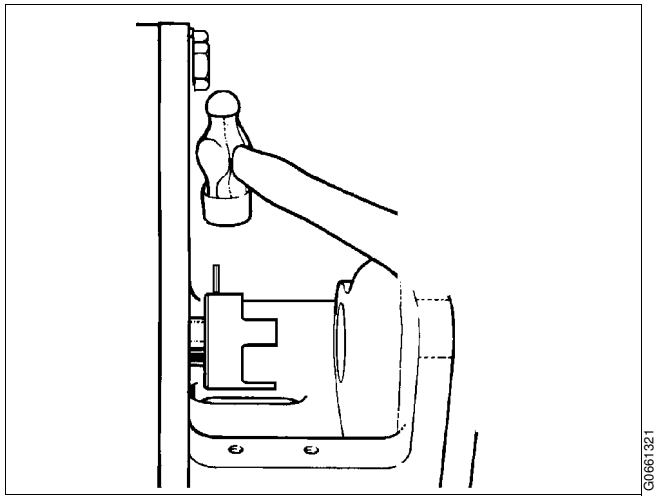

4. Place the O-ring in pump housing.

   Put the spring and valve cone in place in the pump shield.

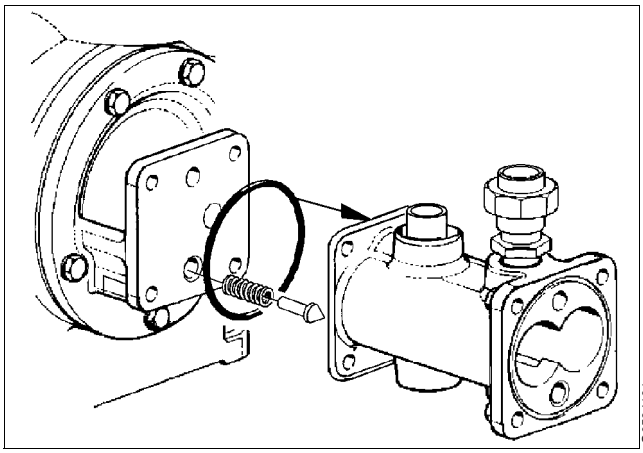

5. Place the bushing with shoulder in pump shield (flat side vertical pointing to center).

   Enter the other bushing into pump housing with flat side to center.

   Fit housing by entering over the bushing in shield. Ensure that valve cone enters the valve seat.

   Fit and tighten the screws.

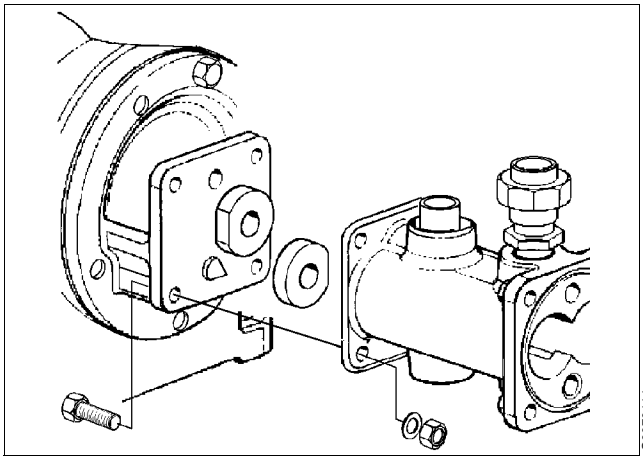

6. Put the wear gaskets one at each side of the outlet impellers, then place the bushings one in opposite direction to the other on impeller shaft.

   Keep all parts together and push the package in to pump housing.

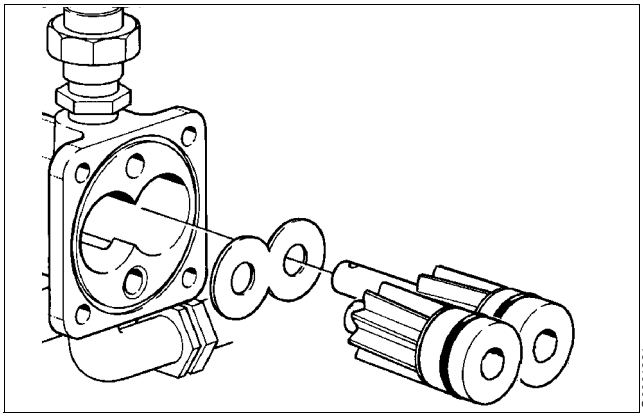

7. Repeat point 6 for inlet impellers.

   Note that the tongue on impeller shaft should fit in the slot of outlet impeller shaft.

   Press gently until the impeller shaft is visible at the coupling side. Enter the coupling half on shaft and press the package in place.

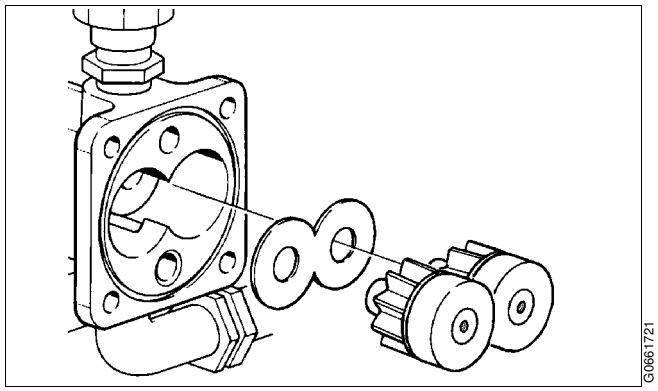

8. Fit and tighten the six screws for bearing shield.

9. Secure the coupling half with the pin.

   Rotate the bowl to align the holes.

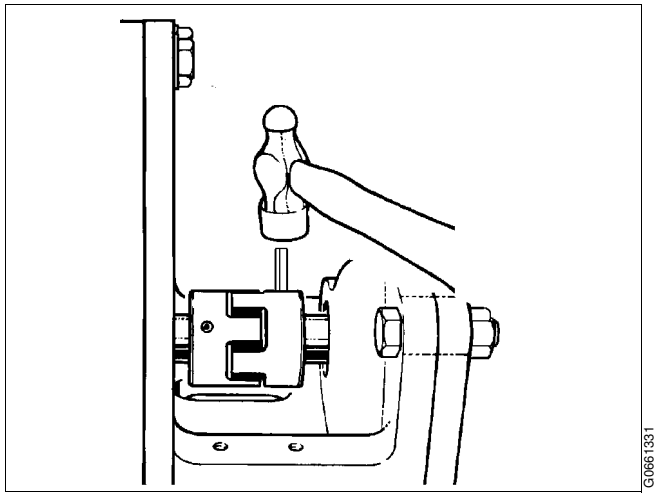

10. Place O-ring in the groove in pump housing and the spring and valve cone in pump shield.

    Fit pump shield and fasten it with four screws.

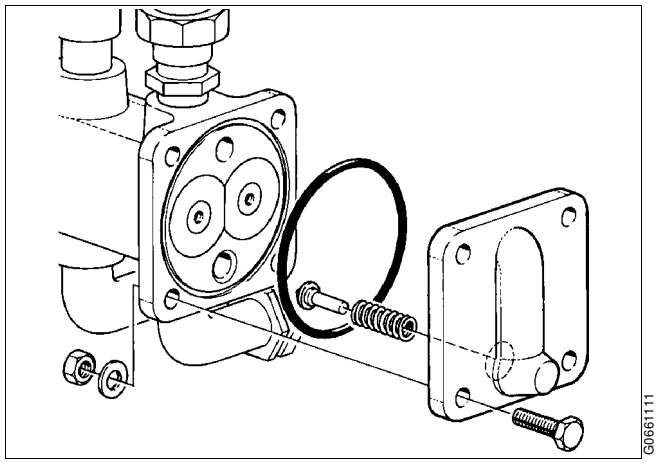

11. Fasten the guard over the flexible coupling.

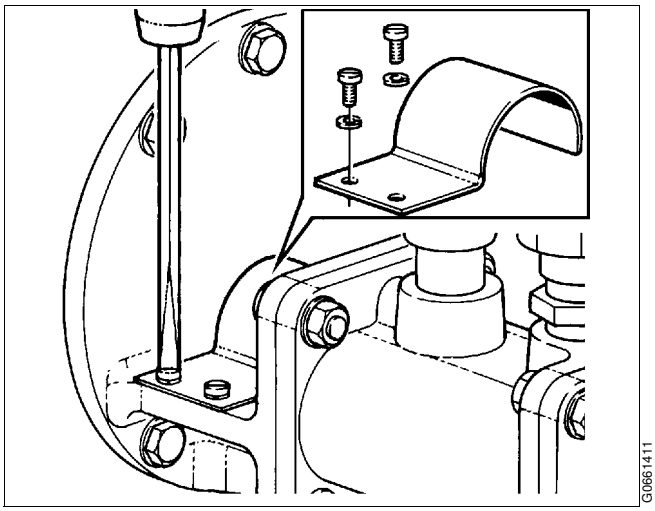

12. Fit control housing and its pipes.

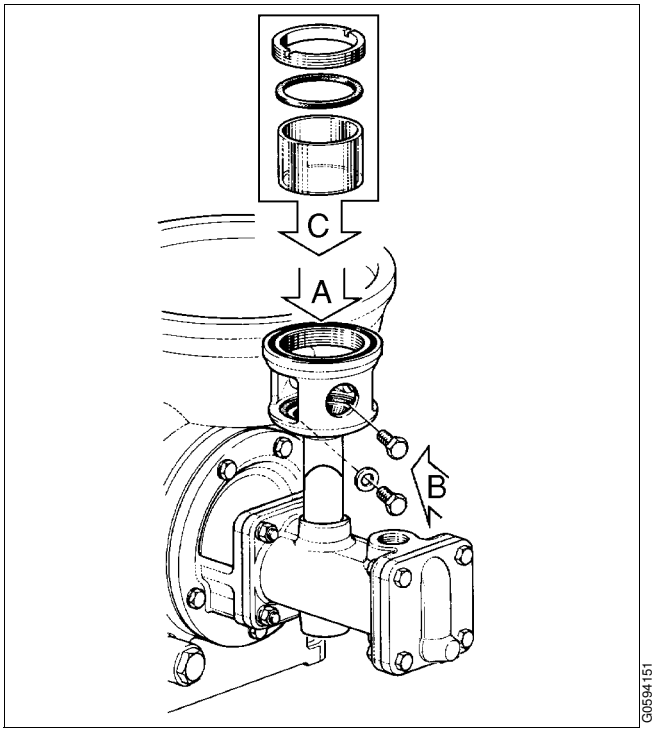

13. Connect all pipings.

6.5 Frame feet

When renewing the frame feet, the separator must be lifted.

See “5.7 Lifting instructions” on page 83.

NOTE

Always remove the bowl before lifting the separator.

When lifting and moving the separator, follow normal safety precautions for lifting large heavy objects.

6.5.1 Mounting of new frame feet

1. When the separator has been lifted, remove the old vibration dampers (3).
2. Fit the new vibration dampers on the bolts.
3. Lift the separator in to position.
4. Tighten the nut (2) with **16 Nm**.

   Hold the nut firmly and secure with the lock nut (1). Repeat for the other frame feet.

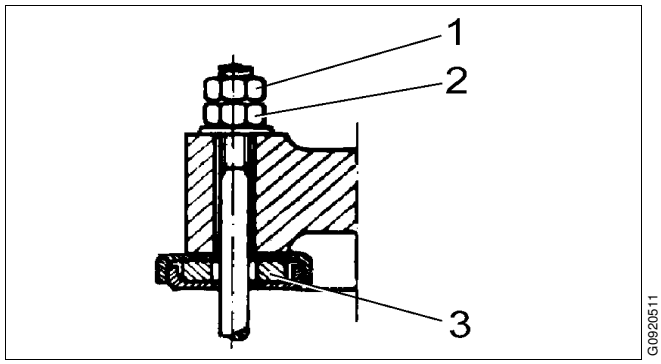

Frame foot with vibration damper
1. Lock nut
2. Nut
3. Vibration damper

7 Trouble-tracing

Contents

7.1 Trouble tracing procedure 121

7.2 Mechanical function 121

7.2.1 The separator does not start 121
7.2.2 Start-up time too long 121
7.2.3 Starting power too low 122
7.2.4 Starting power too high 122
7.2.5 Separator vibrates excessively during starting sequence 123
7.2.6 Separator vibrates excessively during normal running 123
7.2.7 Smell 124
7.2.8 Noise 124
7.2.9 Speed too high 124
7.2.10 Speed too low 125
7.2.11 Stopping time too long 125
7.2.12 Water in oil sump 125
7.2.13 Liquid flows through bowl casing drain 126

7.3 Purification faults 127

7.3.1 Unsatisfactory separation result 127
7.3.2 Outgoing water contaminated by oil 127
7.3.3 Broken water seal 128

7.4 Clarification faults 129

7.4.1 Unsatisfactory separation result 129
7.4.2 Oil discharge through water outlet 129

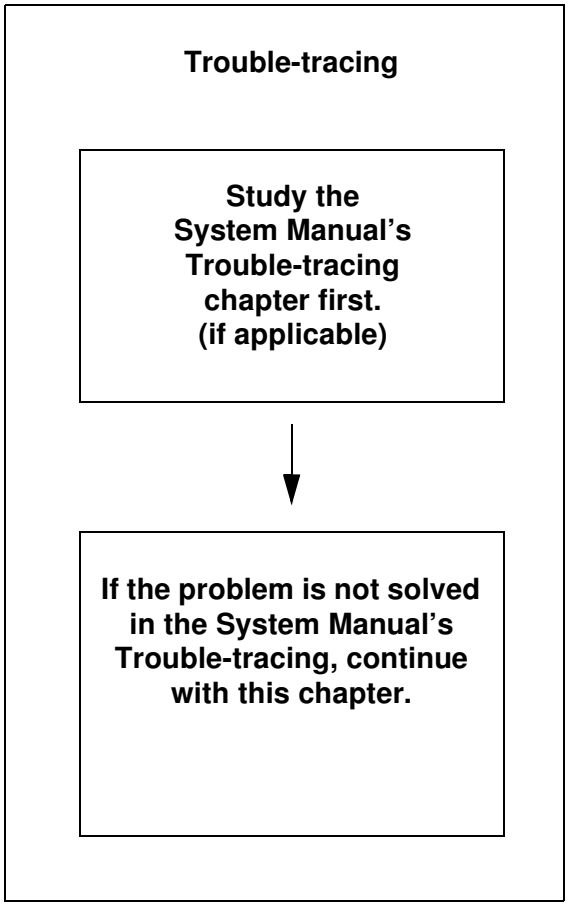
Trouble-tracing
Study the System Manual's Trouble-tracing chapter first. (if applicable)
If the problem is not solved in the System Manual's Trouble-tracing, continue with this chapter.

7.1 Trouble tracing procedure

This chapter applies to trouble-tracing concerning functions of the separator only. It does not include the other equipment in your processing system.

Always start with trouble-tracing instructions in the System Manual, and if required, continue with the instructions below. If the problem still is not solved, contact your Alfa Laval representative.

7.2 Mechanical function

7.2.1 The separator does not start

Possible cause	Action
No power supply to motor.	Check power supply.
Bowl lock screws stop rotation.	Release lock screws.

7.2.2 Start-up time too long

Possible cause	Action
Brake applied.	Release brake.
Friction pads worn or oily.	Fit new friction pads.
Motor failure.	Repair.
Incorrect power supply (50 Hz instead of 60 Hz).	Use correct power supply. See machine plate.
Bearings damaged or worn.	Install new bearings.

7.2.3 Starting power too low

Possible cause	Action
Motor failure.	Repair the motor.
Friction pads worn.	Fit new friction pads.
Friction pads oily.	Fit new friction pads.

7.2.4 Starting power too high

Possible cause	Action
Bowl lock screws stop rotation.	Release lock screws.
Brake is on.	Release brake.
Motor failure.	Repair the motor.
Gear worn out.	Renew worm wheel and worm.
Bearing damaged or worn.	Install new bearings.
Incorrect transmission (50 Hz gear and 60 Hz power supply).	⚠ **WARNING: Disintegration hazard** STOP immediately! Install correct transmission. Contact your local Alfa Laval representative. The bowl must be inspected.
Wrong direction of rotation.	STOP. Adjust motor power connection.

7.2.5 Separator vibrates excessively during starting sequence

NOTE Some vibration is normal during starting sequence when the separator passes through its critical speeds.	
Possible cause	**Action**
Bowl out of balance due to: poor cleaning incorrect assembly too few discs insufficiently tightened bowl hood bowl assembled with parts from other separators.	⚠ **WARNING: Disintegration hazard** STOP immediately! Identify and rectify cause.
Vibration dampers in frame feet worn out.	Fit new vibration dampers.
Bowl spindle bent (max. 0,15 mm).	Fit a new bowl spindle.
Top and/or bottom bearing damaged or worn.	Fit new bearings.
Top bearing springs defective.	Fit new springs.

7.2.6 Separator vibrates excessively during normal running

Possible cause	**Action**
Uneven sludge deposits in sludge space.	STOP and clean bowl.
Bearings damaged or worn.	Fit new bearings.
Vibration-damping rubber washers worn out.	Fit new frame feet washers every four years.
Spindle top bearing spring(s) broken.	Renew all springs.

7.2.7 Smell

Possible cause	Action
Normal occurrence during start as the (new) friction blocks slip.	None.
Brake is applied.	Release the brake.
Top and/or bottom bearing overheated.	Fit new bearings.

7.2.8 Noise

Possible cause	Action
Oil level in oil sump is too low.	STOP and read oil level and add oil.
Top and/or bottom bearing damaged or worn.	Fit new bearings.
Friction pads worn.	Fit new friction pads.

7.2.9 Speed too high

Possible cause	Action
Incorrect transmission (50 Hz gear running on 60 Hz power supply).	⚠ **WARNING: Disintegration hazard** STOP immediately! Install correct transmission. Contact your local Alfa Laval representative. The bowl must be inspected.
Frequency of power supply too high.	Check.

7.2.10 Speed too low

Possible cause	Action
Brake is on.	Release the brake.
Friction pads worn or oily.	Fit new friction pads or clean the old ones if they are oily.
Motor failure.	Repair the motor.
Top/bottom bearings damaged or worn.	Fit new bearings.
Bearing overheated/damaged.	Fit new bearings.
Incorrect transmission (60 Hz gear running on 50 Hz power supply).	Make sure that the gear is intended for 50 Hz power supply.

7.2.11 Stopping time too long

Possible cause	Action
Brake lining worn or oily.	Fit new brake lining or clean the old one if it is oily.

7.2.12 Water in oil sump

Possible cause	Action
Bowl casing drain obstructed.	Clean. Change oil.
Leakage at top bearing.	Fit a new seal ring and change oil.
Condensation.	Clean the oil sump. Change oil.

7.2.13 Liquid flows through bowl casing drain

Possible cause	Action
Broken water seal.	Stop feed and feed water to create water seal.
Too high throughput	Reduce the feed.
The supply of displacement/sealing water is not sufficient due to clogged strainer, kinked hose or low water pressure.	Straighten the hose or clean the strainer. Make sure the water pressure is 200-600 kPa (2-6 bar).
Seal ring on gravity/clarifier disc defective.	Fit a new seal ring.
Bowl hood seal ring defective.	Fit a new seal ring.
Bowl speed too low.	Make sure current is on and brake is off. Inspect motor and power transmission.

7.3 Purification faults

7.3.1 Unsatisfactory separation result

Possible cause	Action
Gravity disc hole too small.	Use a gravity disc with a larger hole.
Incorrect separating temperature.	Adjust temperature.
Throughput too high.	Reduce throughput.
Sludge space in bowl is filled.	Empty the sludge basket in the bowl.
Disc stack clogged.	Clean the bowl discs.
Bowl speed too low.	See “7.2.10 Speed too low” on page 125.

7.3.2 Outgoing water contaminated by oil

Possible cause	Action
Gravity disc hole too large.	Use a gravity disc with a smaller hole.
Seal ring under the gravity disc defective.	Fit a new seal ring.

7.3.3 Broken water seal

Possible cause	Action
Gravity disc too large.	Use a gravity disc with a smaller hole.
Separation temperature too low.	Increase temperature.
Throughput too high.	Reduce throughput.
Sealing water volume too small.	Supply more water.
Seal ring under gravity disc defective.	Fit a new seal ring.
Disc stack clogged.	Clean the bowl discs.
Bowl speed too low.	Use correct speed. See “7.2.10 Speed too low” on page 125.
Bowl incorrectly assembled.	Examine and make correct.

7.4 Clarification faults

7.4.1 Unsatisfactory separation result

Possible cause	Action
Separating temperature too low.	Adjust.
Throughput too high.	Reduce throughput.
Feed oil contains water.	Re-assemble and operate the separator as a purifier.
Disc stack clogged.	Clean the bowl discs.
Sludge space in bowl filled.	Empty the sludge basket.
Bowl speed too low.	See “7.2.10 Speed too low” on page 125.

7.4.2 Oil discharge through water outlet

Possible cause	Action
Valve(s) in outlet line closed.	Open the valve(s) and adjust to normal back pressure.
Disc stack clogged.	Clean the bowl discs.
Seal ring under gravity disc is defective.	Fit a new seal ring.
Bowl incorrectly assembled.	Examine and make correct.

8 Technical reference

Contents

8.1 Product description 133

8.1.1 Declaration - EU 134

8.1.2 Declaration - UK 136

8.2 Technical data 138

8.2.1 Selection of gravity disc with the nomograph 139

8.3 Basic size drawing, separator without pump 141

8.4 Basic size drawing, separator with pump and no heater 142

8.5 Basic size drawing, separator with pump and heater 143

8.6 Connection list, (with pump and no heater / without pump) 144

8.7 Connection list, (pump and heater) 145

8.8 Interface description 146

8.8.1 Definitions 146

8.8.2 Component description and signal processing 147

8.8.3 Function graph and running limitations 148

8.9 Lubricants 149

8.9.1 Lubrication chart 149

8.9.2 Recommended lubricants 150

8.9.3 Recommended lubricating oils 154

8.10 Drawings 157

8.10.1 Cross-section, complete separator 157

8.10.2 Cross-section, horizontal driving device 158

8.10.3 Cross-section, purifier bowl 159

8.10.4 Cross-section, clarifier bowl 160

8.10.5 Cross-section, pump 161

8.10.6 Cross-section, water inlet device 163

8.10.7 Machine plates and safety labels 164

8.11 Electric motor 166

8.12 Storage and installation 167

8.12.1 Storage and transport of goods 167

8.12.2 Planning and installation 170

8.12.3 Foundations 173

8.1 Product description

Alfa Laval ref. 9024666, rev. 3

Product number	881241-08-17
Separator type	MAB 104B-14/24
Application	Mineral oil
Technical Design:	Solid-wall separator bowl available as: – Purifier with all parts of stainless steel. – Purifier/clarifier with parts of brass/stainless steel. Frame with collecting cover of aluminium. Sealings available in Nitrile. Intended for marine- and land applications.
Restrictions:	Feed temperature: 0 to +100 °C Ambient temperature: +5 to +55 °C Not to be used for liquids with flash point below 60 °C. Risk for corrosion and erosion has to be investigated in each case by the application centre.

8.1.1 Declaration - EU

Alfa Laval ref. 9033858, rev. 4

This declaration is issued under the sole responsibility of the manufacturer.

Manufacturer: Alfa Laval Technologies AB

Manufacturer address: Alfa Laval Technologies AB, Box 74. SE-221 00 Lund - Sweden

Separator type:.....

Product specification:.....

Configuration number:.....

Serial number:.....

Declaration of Incorporation of Partly Completed Machinery

The machinery complies with the relevant, essential health and safety requirements of:

Designation	Description
2006/42/EC	Machinery Directive

The following essential requirements of 2006/42/EC are applied and fulfilled:

1.1, 1.1.2, 1.1.3, 1.1.4, 1.1.5, 1.1.6, 1.1.7, 1.2.3, 1.2.4, 1.3.1, 1.3.2, 1.3.3, 1.3.4, 1.3.7, 1.3.8, 1.3.9, 1.5.1, 1.5.2, 1.5.4, 1.5.5, 1.5.6, 1.5.8, 1.5.9, 1.5.11, 1.5.15, 1.6.1, 1.6.3, 1.6.4, 1.6.5, 1.7

To meet the requirements the following standards have been applied:

Designation	Description
EN 60204-1 :2018	Safety of machinery - Electrical equipment of machines. Part 1: General requirements
EN ISO 12100 :2010	Safety of machinery - General principles for design - Risk assessment and risk reduction
ISO 3744 :2010	Acoustics - Determination of sound power levels of noise sources using sound pressure

EU Declaration of Conformity

The machinery complies with the following Directives:

Designation	Description
2014/30/EU	Electromagnetic Compatibility Directive
2011/65/EU	Restriction of the use of certain hazardous substances in electrical and electronic equipment

To meet the requirements the following standards have been applied:

Designation	Description

EN IEC 63000 :2018	Technical documentation for the assessment of electrical and electronic products with respect to the restriction of hazardous substances

The technical construction file for the machinery is compiled and retained by the authorized person Fredrik Nytomt within the Business Unit High Speed Separators,
Alfa Laval Technologies AB, Box 74. SE-221 00 Lund, Sweden. By reasoned request all relevant technical documentation will be sent by post to national authorities.

This machinery is to be incorporated into other equipment and must not be put into service until it has been completed with starting/stopping equipment, control equipment, auxiliary equipment. e.g. valves, according to the instructions in the technical documentation, and after the completed machinery has been declared in conformity with the directives mentioned above, in order to fulfill the EU-requirements.

Signed for and on behalf of: Alfa Laval Technologies AB

Place: .....

Date of issue: .....

Signature: .....

Name: .....

Function: .....

Entity: .....

8.1.2 Declaration - UK

Alfa Laval ref. 9033858, rev. 4

This declaration is issued under the sole responsibility of the manufacturer.

Manufacturer: Alfa Laval Technologies AB

Manufacturer address: Alfa Laval Technologies AB, Box 74. SE-221 00 Lund - Sweden

Separator type:.....

Product specification:.....

Configuration number:.....

Serial number:.....

Declaration of Incorporation of Partly Completed Machinery

The machinery complies with the relevant, essential health and safety requirements of:

Supply of Machinery (Safety) Regulations 2008

The following essential requirements are applied and fulfilled:

1.1, 1.1.2, 1.1.3, 1.1.4, 1.1.5, 1.1.6, 1.1.7, 1.2.3, 1.2.4, 1.3.1, 1.3.2, 1.3.3, 1.3.4, 1.3.7, 1.3.8, 1.3.9, 1.5.1, 1.5.2, 1.5.4, 1.5.5, 1.5.6, 1.5.8, 1.5.9, 1.5.11, 1.5.15, 1.6.1, 1.6.3, 1.6.4, 1.6.5, 1.7

To meet the requirements the following standards have been applied:

Designation	Description
EN 60204-1 :2018	Safety of machinery - Electrical equipment of machines. Part 1: General requirements
EN ISO 12100 :2010	Safety of machinery - General principles for design - Risk assessment and risk reduction
ISO 3744 :2010	Acoustics - Determination of sound power levels of noise sources using sound pressure

UK Declaration of Conformity

The machinery complies with the following Regulations:

Electromagnetic Compatibility Regulations 2016

The Restriction of the Use of Certain Hazardous Substances in Electrical and Electronic Equipment Regulations 2012

To meet the requirements the following standards have been applied:

Designation	Description
EN IEC 63000 :2018	Technical documentation for the assessment of electrical and electronic products with respect to the restriction of hazardous substances

The technical construction file for the machinery is compiled and retained by the authorized person Fredrik Nytomt within the Business Unit High Speed Separators,
Alfa Laval Technologies AB, Box 74. SE-221 00 Lund, Sweden. By reasoned request all relevant technical documentation will be sent by post to national authorities.

This machinery is to be incorporated into other equipment and must not be put into service until it has been completed with starting/stopping equipment, control equipment, auxiliary equipment. e.g. valves, according to the instructions in the technical documentation, and after the completed machinery has been declared in conformity with the regulations mentioned above, in order to fulfill the UK-requirements.

Signed for and on behalf of: Alfa Laval Technologies AB

Place: .....

Date of issue: .....

Signature: .....

Name: .....

Function: .....

Entity: .....

8.2 Technical data

Alfa Laval ref. 558168, rev. 2

Bowl speed max.	7500 / 7350	rev/min. 50Hz/60Hz
Speed motor shaft max.	1500 / 1800	rev/min. 50Hz/60Hz
Gear ratio	50:10 / 49:12	50Hz/60Hz
Hydraulic capacity	2	m^3/h
Max. density of sediment/feed.	1600 / 1100	kg/m^3
Feed temperature	0 / 100	min./max. °C
Weight of separator	149	kg (without motor)
Motor power	1,1 / 1,5	kW (without pump/ with pump)
Jp reduced to motor shaft	4,8	kg/m^2 50Hz
Jp reduced to motor shaft	3,2	kg/m^2 60Hz
Power consumption	0,5 / 1,8	kW (idling/at max. capacity)
Max. power consumption	1,3	kW (at starting up)
Starting time	2 / 3	minutes (min./ max.)
Stopping time with brake	1,4 / 3	minutes (min./ max.)
Stopping time without brake	9	minutes (average)
Lubricating oil volume	0,8	litres
Max. running time:		
empty bowl	480	minutes
filled bowl, without flow	480	minutes
Sound power/sound press. level	9,3 / 78	Bel(A) /dB(A)
Vibration level max.	9	mm/sec (new sep./sep. in use)
Bowl max. inner diameter	214	mm
Bowl volume	2,5	litres
Bowl weight	25	kg
Bowl body material	AL 111 2377-02	

There are other materials than stainless steel in contact with process liquid.

8.2.1 Selection of gravity disc with the nomograph

The best separating results are obtained by using a gravity disc with large hole as possible, one which will not cause a broken water seal in the bowl or an emulsification in the water outlet.
The presence of salt water may demand the use of gravity disc with bigger hole than indicated in the nomograph (the nomograph is based on the density properties of fresh water).

Table for obtaining the gravity disc

If the light-liquid specific weight at 15°C (60°F) is known and the heavy liquid is water, the obtain diameter with gravity-disc should first be used from table one (I). If separating temperature is 55° C (130° C) or from table two (II), separating temperature is between 80°-100°C (175°-212°F). The hole diameter is inscribed in millimetre (mm) on every disc.

Table I	Table **II**	**hole diameter mm**
0,999 - 0,991	1,002 - 0,994	57, 5
0,991 - 0,980	0,994 - 0,982	60
0,980 - 0, 963	0,982 - 0,966	63
0,963 - 0,938	0,966 - 0,942	68
0,938 - 0,901	0,942 - 0,906	73, 5
0,901 - 0,843	0,906 - 0,849	83
0,843 -	0,849	93, 5

Nomograph for obtaining gravity disc

If the light-phase specific weight is known at a temperature between 15°C -70°C (60°F - 158°F) and the heavy phase is water, then the diameter for the disc is obtained by first testing with the separating temperature up to 100°C (121°F) from the given nomograph.

Example in the nomograph	**I**	**II**
Designation in the graph	-----	—·—·—·—
The light phase specific weight	0, 96 at 15°C (60°F)	0, 87 at 25°C (75°F)
Separating temperature	70°C (160°F)	60°C (140°F)
Hole diameter.	68 mm	83 mm

Gravity disc nomograph

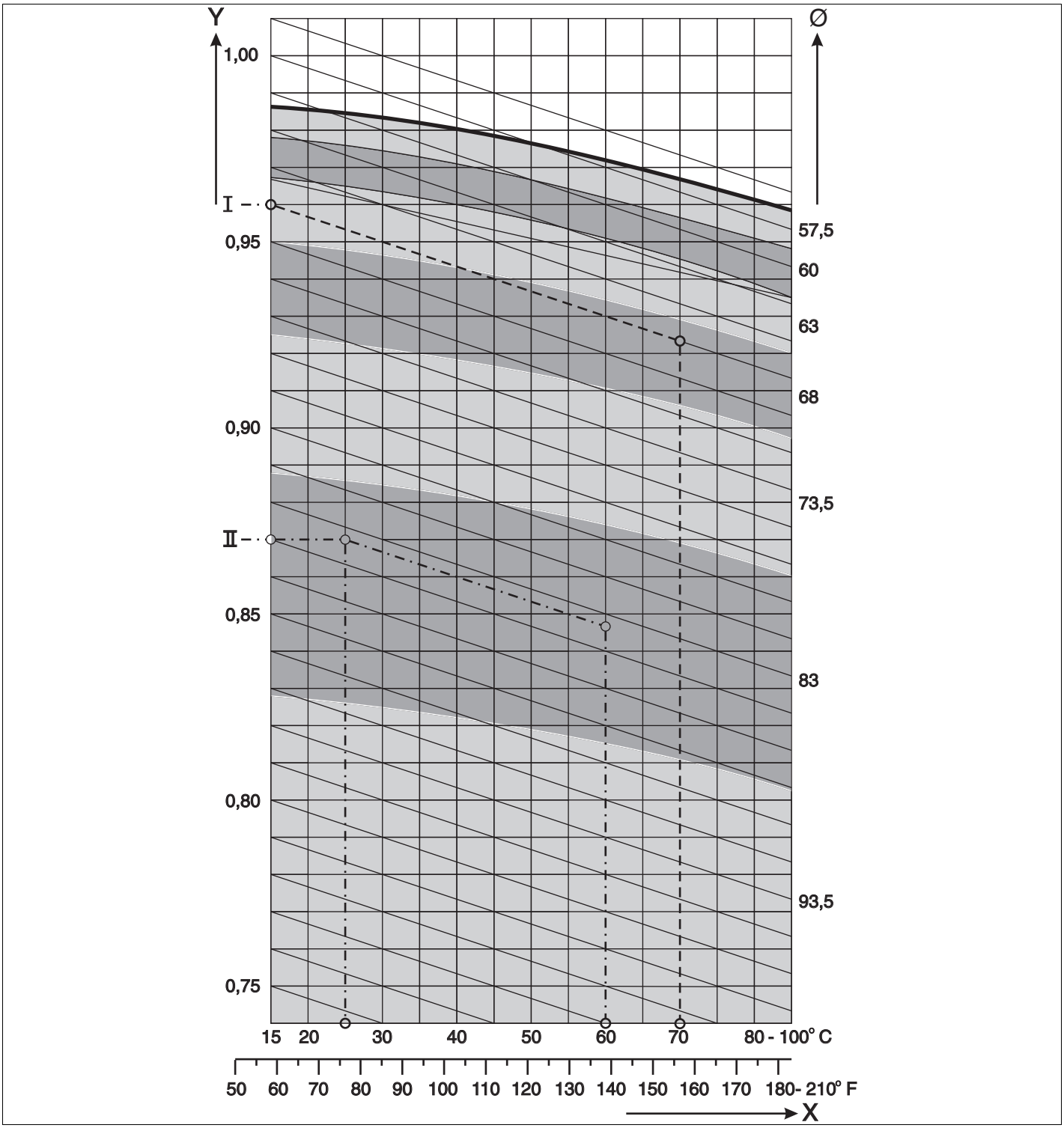

X = Separating temperature in °C and °F

Y = The light phase specific weight

Ø = Gravity disc hole diameter mm

8.3 Basic size drawing, separator without pump

Alfa Laval ref. 9024668, rev. 0

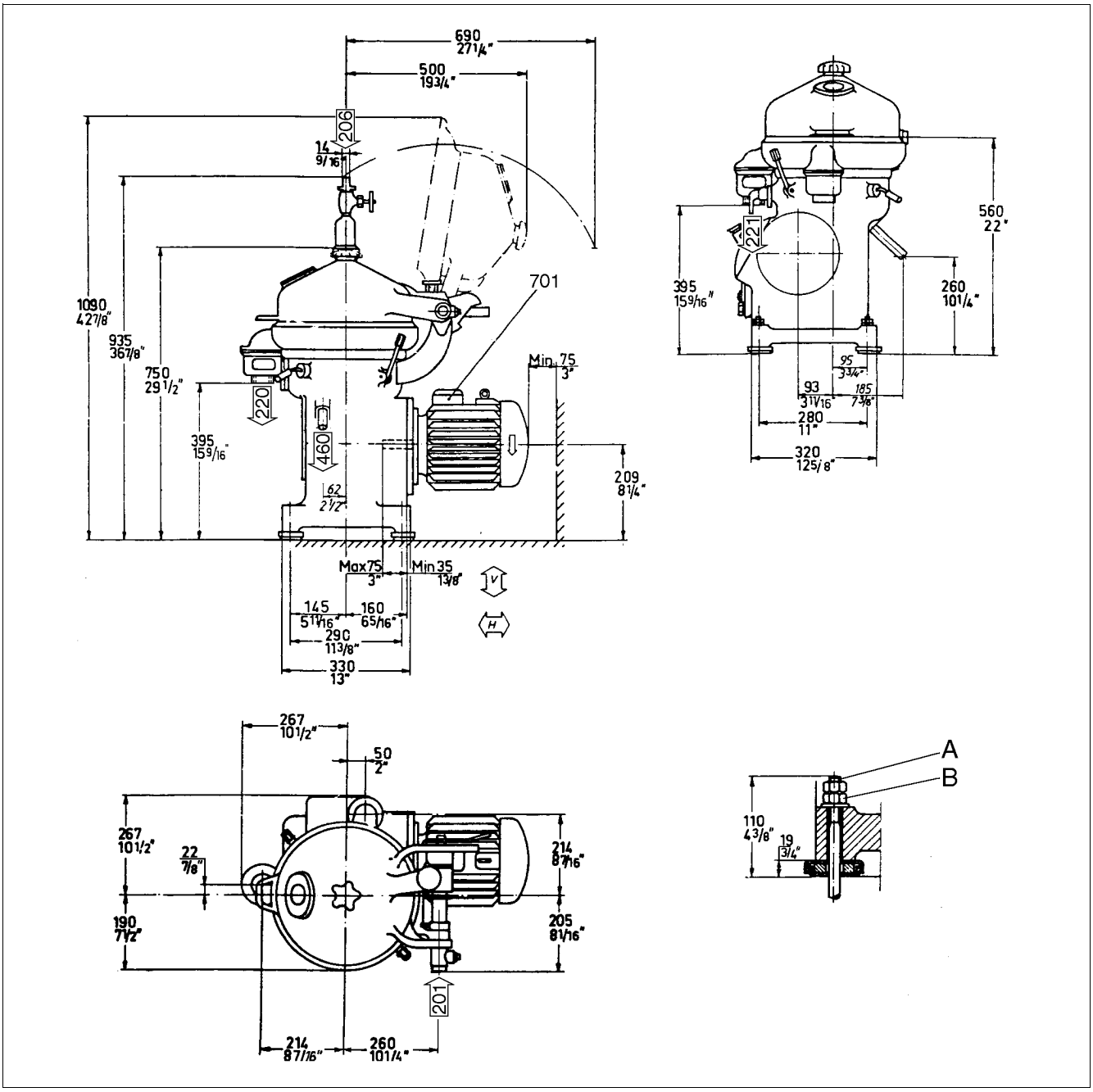

A. Screw 1/2-13UNC
B. Tightening torque 16 Nm, locked with lock nut

Data for connections see "8.6 Connection list, (with pump and no heater / without pump)" on page 144.
All connections to be installed non-loaded and flexible.

V — *Vertical force not exceeding 8 kN/foot*

H — *Horizontal force not exceeding 8 kN/foot*

8.4 Basic size drawing, separator with pump and no heater

Alfa Laval ref. 9024670, rev. 0

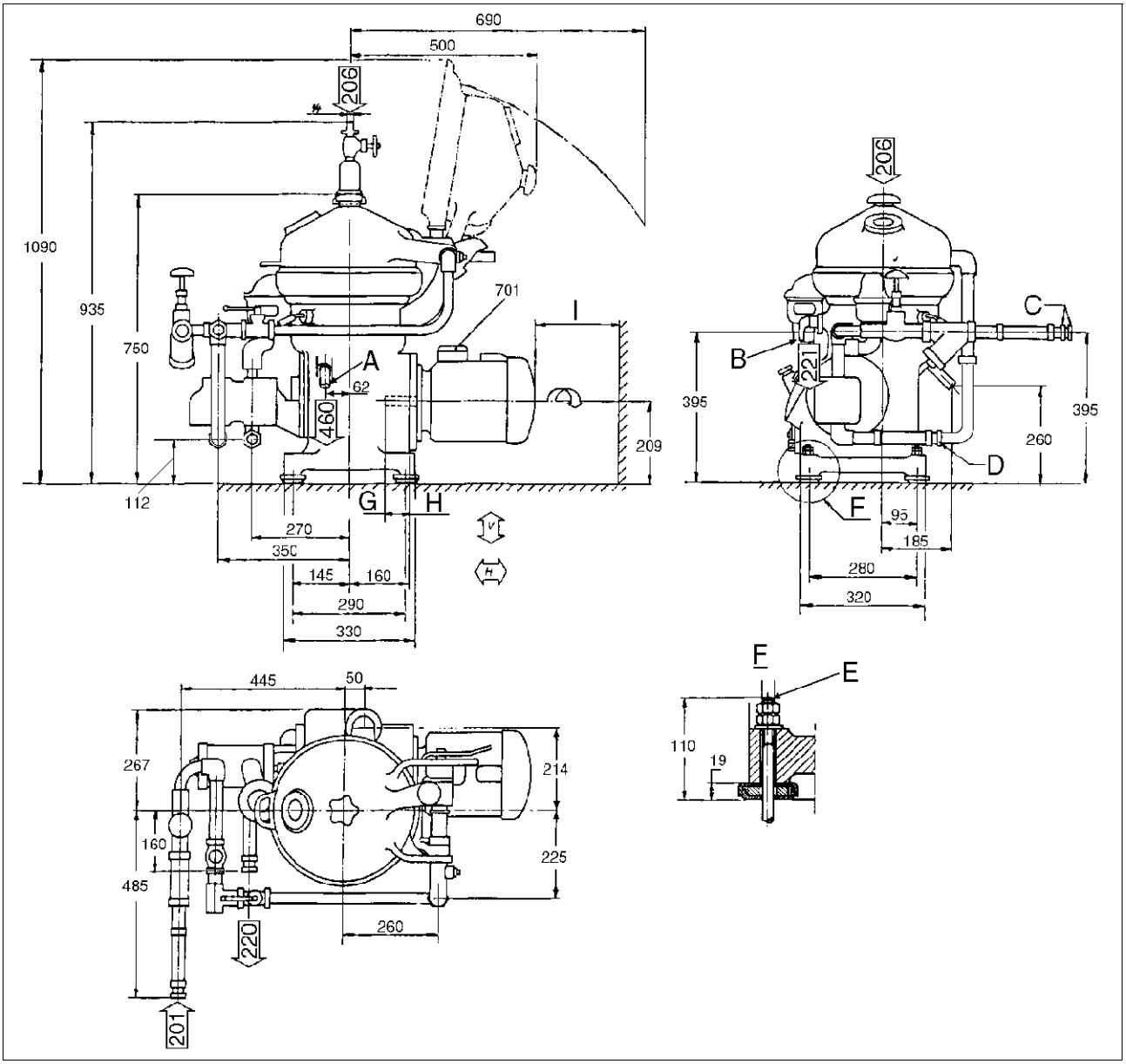

A. R 3/4", BSP 3/4
B. R 1 1/4", BSP 1 1/4
C, D. R 1", BSP 1
E. 1/2-13 UNC
F. View

Vertical force not exceeding 8 kN/foot

Horizontal force not exceeding 8 kN/foot

Data for connections see "8.6 Connection list, (with pump and no heater / without pump)" on page 144.
All connections to be installed non-loaded and flexible.

8.5 Basic size drawing, separator with pump and heater

Alfa Laval ref. 9024669, rev. 0

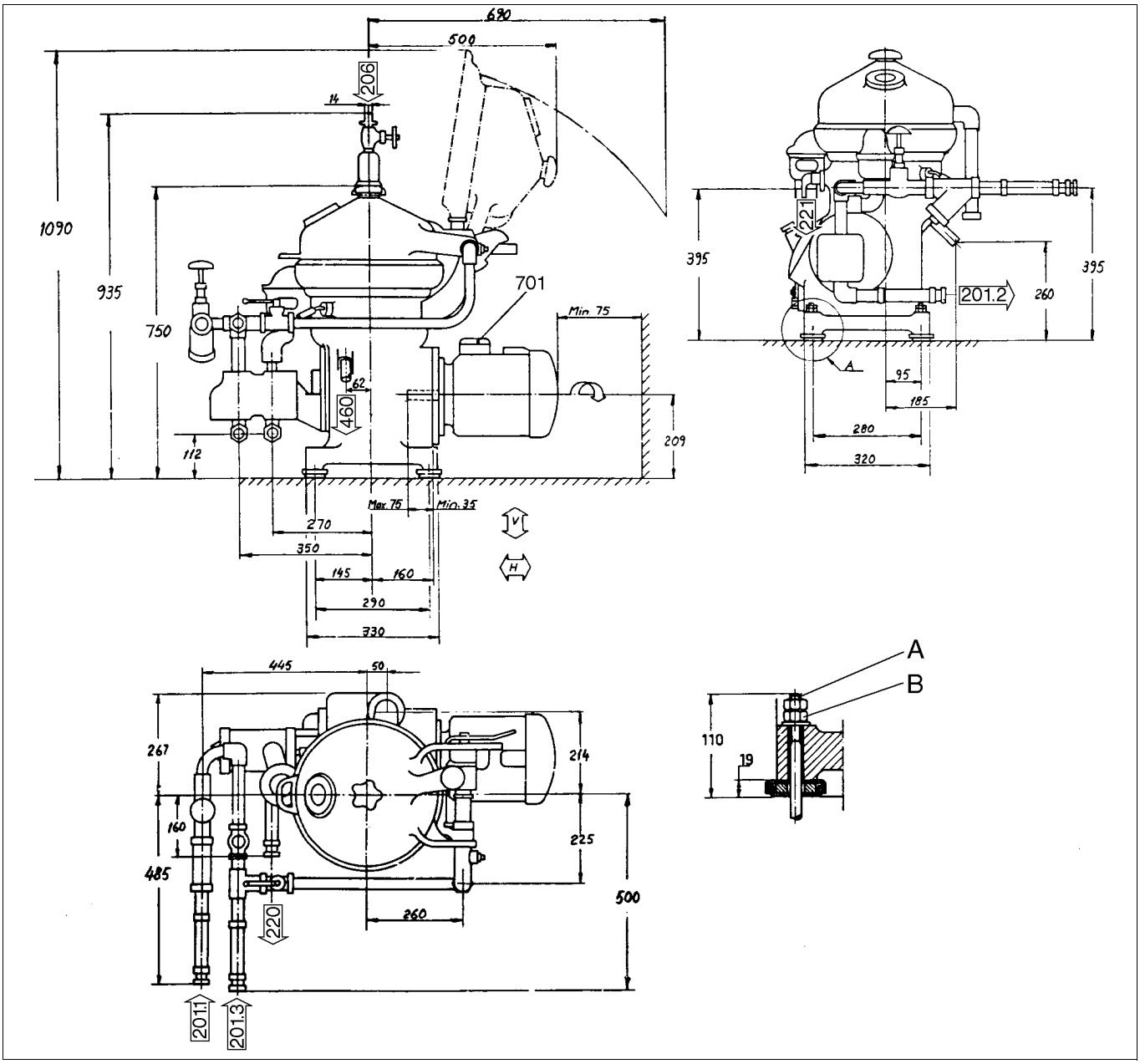

A. Screw 1/2-13UNC
B. Tightening torque 16 Nm, locked with lock nut

Data for connections see "8.7 Connection list, (pump and heater)" on page 145.

All connections to be installed non-loaded and flexible.

V — Vertical force not exceeding 8 kN/foot

H — Horizontal force not exceeding 8 kN/foot

8.6 Connection list, (with pump and no heater / without pump)

Alfa Laval ref. 9024671, rev. 0

Connection No.	Description	Requirements/limit
201	Inlet for process liquid - Allowed temperatures	Min. 0 °C, max. 100 °C
206	Inlet for water seal	Fresh water, approx. 2,5 litres (depending on gravity disc)
220	Outlet for light phase (oil from pump)	
221	Outlet for heavy phase (water)	No counterpressure
460	Drain of frame	
701	Motor for separator - Max. deviation from nominal frequency	±5%

8.7 Connection list, (pump and heater)

Alfa Laval ref. 9024672, rev 0

Connection No.	Description	Requirements/limit
201.1	Inlet for process liquid, (to pump) - Allowed temperatures	Min. 0 °C, max. 100 °C
201.2	Outlet for process liquid, (from pump to heater)	
201.3	Inlet for process liquid, (from heater to separator)	
206	Inlet for water seal	Fresh water, approx. 2.5 litres (depending on gravity disc)
220	Outlet for light phase (oil from pump)	No counterpressure
221	Outlet for heavy phase (water)	No counterpressure
460	Drain of frame	
701	Motor for separator - Max. deviation from nominal frequency	±5%

8.8 Interface description

Alfa Laval ref. 9024640, rev 1

In addition to the Connection List this document describes limitations and conditions for safe control, monitoring and reliable operation.

At the end of the document a function graph and running limitations are to be found.

8.8.1 Definitions

Standstill means:

- The machine is assembled correctly.
- All connections are installed according to Connection List, Interconnection Diagram and Interface Description.

Start means:

- The power to the separator is on.
- The acceleration is supervised to ensure that a certain speed has been reached within a certain time. See "8.2 Technical data" on page 138.

Normal stop means:

- Stopping of the machine at any time with feed or safety/backup liquid and with brake applied.

Safety stop means:

The machine must be stopped in the quickest and safest way due to vibrations or process reasons.

Comply with following conditions:

- The bowl must be kept filled.
- The machine must not be restarted before the reason for the Safety stop has been investigated and action has been taken.

In case of emergency condition in the plant, the machine must be stopped in a way that is described in EN ISO 13850.

8.8.2 Component description and signal processing

Electrical connections

Separator motor 701

The separator is equipped with a 3-phase DOL-started (direct on line) motor. The separator can also be started by a Y/D starter, but then the time in Y-position must be maximised to 5 seconds.

8.8.3 Function graph and running limitations

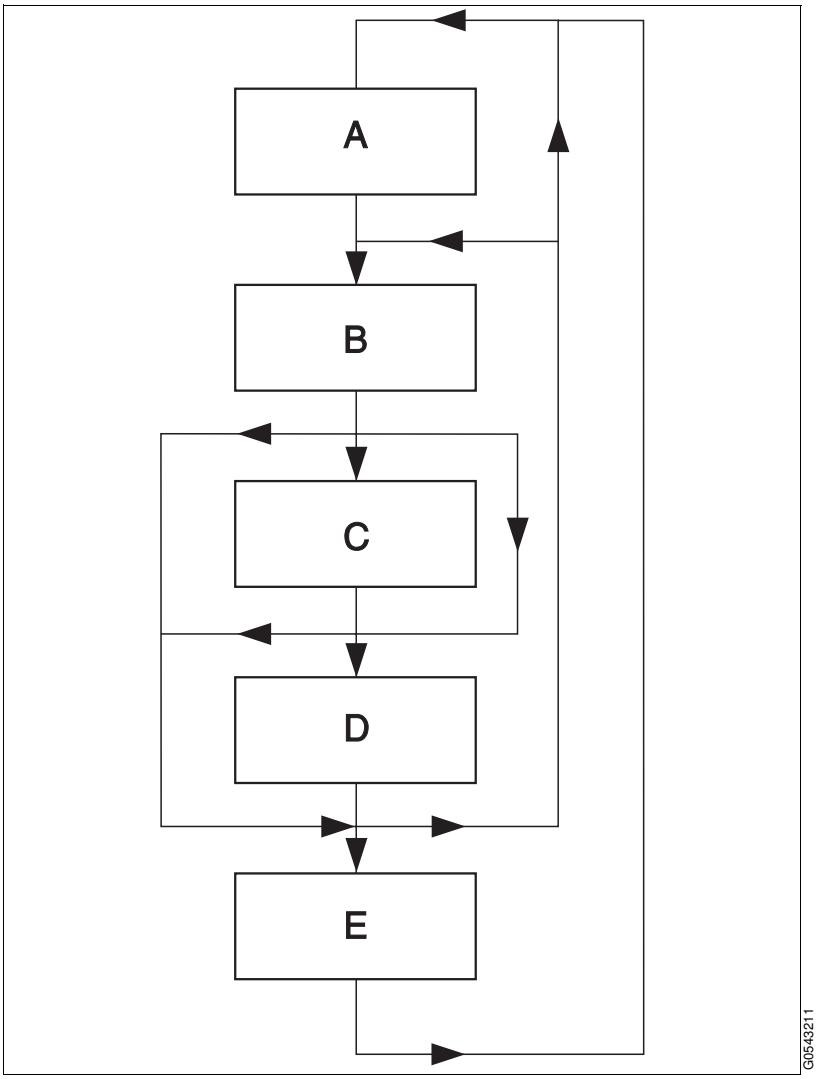

A. Stand still
B. Starting mode
C. Running mode
D. Stop mode
E. Safety stop mode

8.9 Lubricants

8.9.1 Lubrication chart

Alfa Laval ref. 553216-01 rev. 9

CAUTION

Check the oil level before start.
Top up when necessary.
Do not overfill.

Lubricating points	Lubrication	Interval
The oil bath Bowl spindle bearings are lubricated by oil splash from the oil bath.	Lubricate with oil. For information on type of lubricant see Recommended lubricating oils. For information on lubricating oil volume: see Technical data	For information on oil change interval see Recommended lubricating oils.
Bowl spindle taper	Lubricate with oil. Only a few drops for rust protection.	At assembly.
Bowl Sliding contact surfaces, thread of lock nut and cap nut.	Lubricate with paste. For information on pastes see Recommended oil brands.	At assembly.
Rubber seal rings	Lubricate with grease. For information on grease see Recommended lubricating oils	At assembly.
Friction coupling ball bearings. ***Not valid for rigid coupling:***	The bearings are sealed and packed with grease and need no extra lubrication.	-
Electric motor	Follow manufacturer's instructions.	Follow manufacturer's instructions.
Threads	Lubricating oil, if not otherwise stated.	At assembly.

NOTE!

If not otherwise specified, follow the supplier's instructions about applying, handling and storing of lubricants.

8.9.2 Recommended lubricants

Alfa Laval ref. 55 3217-01, rev. 14

Lubricant recommendation for hygienic and non-hygienic applications

Lubricants with an Alfa Laval part number are approved and recommended for use.

The data in the tables below is based on supplier information.

Trade names and designations might vary from country to country. Please contact your local supplier for more information.

Paste for assembly of metallic parts, non-hygienic applications:

Part No	Quantity	Designation	Manufacturer	Remark
537086-02	1000 g	Molykote 1000 Paste	Dow Corning	-
537086-03 537086-06	100 g 50 g	Molykote G-n plus Paste	Dow Corning	-
537086-04	50 g	Molykote G-rapid plus Paste	Dow Corning	-
-	-	Gleitmo 705	Fuchs Lubritech	-
-	-	Wolfracoat C Paste	Klüber	-
-	-	Dry Moly Paste	Rocol	-
-	-	MTLM	Rocol	-

Bonded coating for assembly of metallic parts, non-hygienic applications:

Part No	Quantity	Designation	Manufacturer	Remark
535586-01	375 g	Molykote D321R Spray	Dow Corning	-
-	-	Gleitmo 900	Fuchs Lubritech	Varnish or spray

Paste for assembly of metallic parts, hygienic applications (NSF registered H1 is preferred):

Part No	Quantity	Designation	Manufacturer	Remark
-	-	Molykote D Paste	Dow Corning	-
537086-07	50 g	Molykote P-1900	Dow Corning	NSF Registered H1 (7 Jan 2004)
-	-	Molykote TP 42	Dow Corning	-
561764-01	50 g	Geralyn 2	Fuchs Lubritech	NSF Registered H1 (3 sep 2004)
-	-	Geralyn F.L.A	Fuchs Lubritech	NSF Registered H1 (2 Apr 2007) German §5 Absatz 1 LMBG approved
554336-01	55 g	Gleitmo 1809	Fuchs Lubritech	-
-	-	Gleitmo 805	Fuchs Lubritech	DVGW (KTW) approval for drinking water (TZW prüfzeugnis)
-	-	Klüberpaste 46 MR 401	Klüber	White; contains no lead, cadmium, nickel, sulphur nor halogens.
-	-	Klüberpaste UH1 84-201	Klüber	NSF Registered H1 (26 Aug 2005)
-	-	Klüberpaste UH1 96-402	Klüber	NSF Registered H1 (25 Feb 2004)
-	-	252	OKS	NSF Registered H1 (23 July 2004)
-	-	Foodlube Multi Paste	Rocol	NSF Registered H1 (13 Apr 2001)

Silicone grease/oil for rubber rings, hygienic and non-hygienic applications

Part No	Quantity	Designation	Manufacturer	Remark
-	-	No-Tox Food Grade Silicone grease	Bel-Ray	NSF Registered H1 (16 December 2011)
-	-	Dow Corning 360 Medical Fluid	Dow Corning	Tested according to and complies with all National Formulary (NF) requirements for Dimethicone and European Pharmacopeia (EP) requirements for Dimeticone or Silicone Oil Used as a Lubricant, depending on viscosity.
569415-01	50 g	Molykote G 5032	Dow Corning	NSF Registered H1 (3 June 2005)
-	-	Geralyn SG MD 2	Fuchs Lubritech	NSF Registered H1 (30 March 2007)
-	-	Chemplex 750	Fuchs Lubritech	DVGW approved according to the German KTW-recommendations for drinking water.
-	-	Paraliq GTE 703	Klüber	NSF Registered H1 (25 Feb 2004). Approved according to WRAS.
-	-	Unisilkon L 250 L	Klüber	Complies with German Environmental Agency on hygiene requirements for tap water. Certified by DVGW-KTW, WRAS, AS4020, ACS.
-	-	ALCO 220	MMCC	NSF Registered H1 (25 March 2002)
-	-	Foodlube Hi-Temp	Rocol	NSF Registered H1 (18 April 2001)

Always follow the lubrication recommendations of the bearing manufacturer.

Grease for ball and roller bearings in electric motors

Part No	Quantity	Designation	Manufacturer	Remark
-	-	Energrease LS2	BP	-
-	-	Energrease LS-EP2	BP	-
-	-	Energrease MP-MG2	BP	-
-	-	APS 2	Castrol	-
-	-	Spheerol EPL 2	Castrol	-
-	-	Multifak EP2	Chevron	-
-	-	Multifak AFB 2	Chevron	-
-	-	Molykote G-0101	Dow Corning	-
-	-	Molykote Multilub	Dow Corning	-
-	-	Unirex N2	ExxonMobil	-
-	-	Mobilith SHC 460	ExxonMobil	-
-	-	Mobilux EP2	ExxonMobil	-
-	-	Lagermeister EP2	Fuchs Lubritech	-
-	-	Rembrandt EP2	Q8/Kuwait Petroleum	-
-	-	Alvania EP 2	Shell	-
-	-	LGEP 2	SKF	-
-	-	LGMT 2	SKF	-
-	-	LGFP 2	SKF	NSF Registered H1 (17 Aug 2007)
-	-	Multis EP2	Total	-

8.9.3 Recommended lubricating oils

Alfa Laval ref. 553219-10, rev. 3

Selection of lubricating oil for moderate load gears HSS

Select lubricating oil type with regards to ambient temperature.

Ambient temperature °C	Frame temp cooling	Oil type	Oil change interval (operating hours)
+5 to +45	<80°C	Mineral lubricating oil AL 116 3142 ISO-L-CKC 220 Viscosity grade: VG 220 Viscosity index: VI > 90	1500 h
+5 to +45	<80°C	Mineral lubricating oil AL 116 3144 ISO-L-CKD 220 Viscosity grade: VG 220 Viscosity index: VI > 90	1500 h
+2 to +65	N/A	Synthetic lubricating oil AL 116 3146 ISO-L-CTPR 220 Viscosity grade: VG 220 Viscosity index: VI > 140 Alfa Laval oil types: Art no 542690-80 20 litre Art no 542690-81 4 litre	2000 h
+2 to +65	N/A	Hygienic synthetic lubricating oil AL 116 3158 ISO-L-CTPR 220 Viscosity grade: VG 220 Viscosity index: VI > 140 Registered as NSF H1 for use in the food processing industry Conform to FDA CFR 21 178.3570, 178.3620 and/or generally regarded as safe (US 21 CFR 182)	2000 h

General requirements for HSS lubricating oils

- Compatible with non-ferrous metals. Must be endorsed for worm gears with bronze worm wheel
- Compatible with most paints and conventional sealing materials

Oil change interval

Oil change interval is dependent on operating conditions.

Operating conditions	Oil change interval
In a new installation. After change of gear transmission.	200 hours
Continuous operation.	See Selection of lubricating oil
When the separator is operated for short periods.	12 months
Seasonal operation	Before every operating period

Other information

Check and prelubricate spindle bearings on separators which have been out of service for 6 months or longer.

8.10 Drawings

8.10.1 Cross-section, complete separator

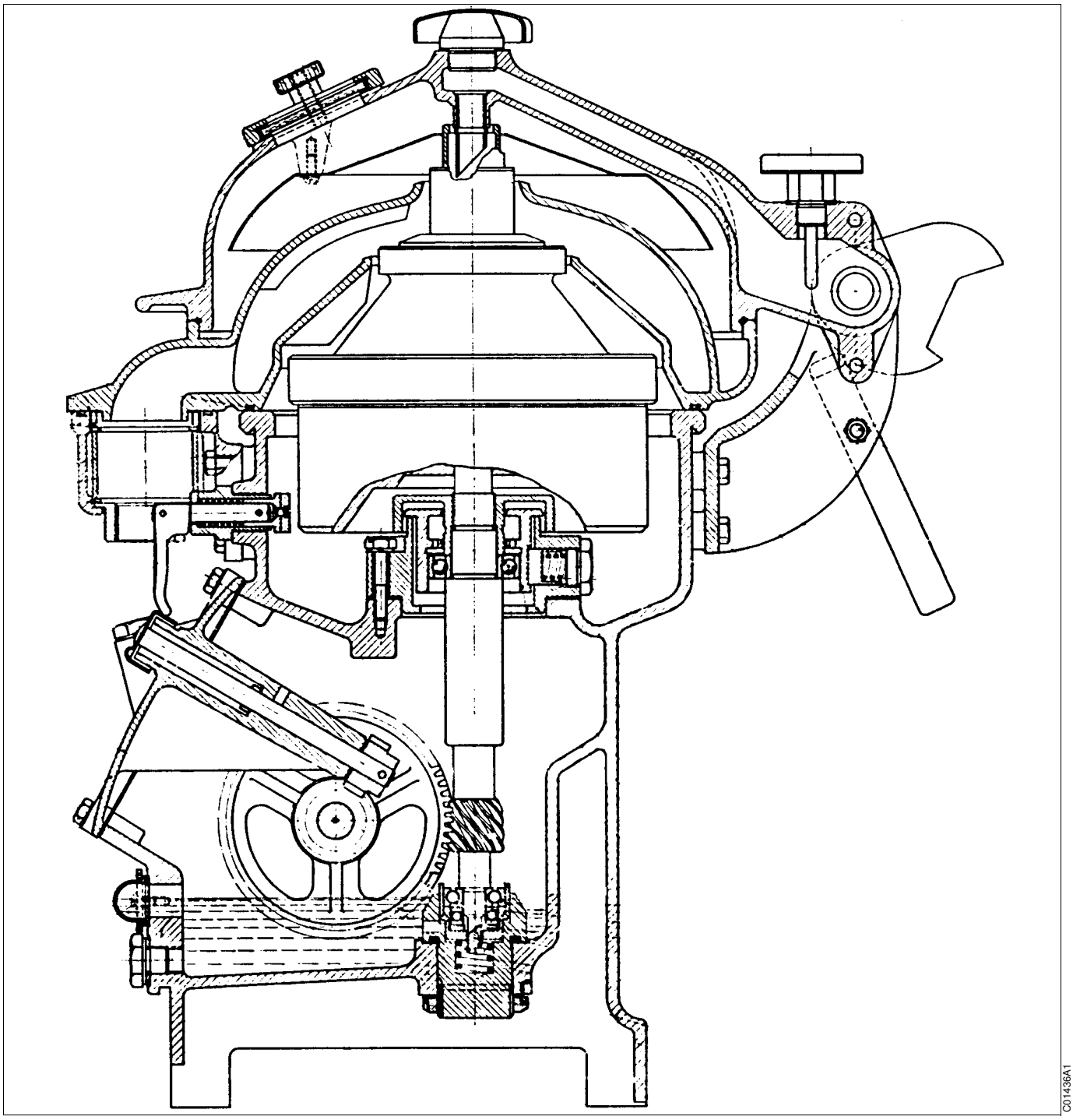

Complete separator

8.10.2 Cross-section, horizontal driving device

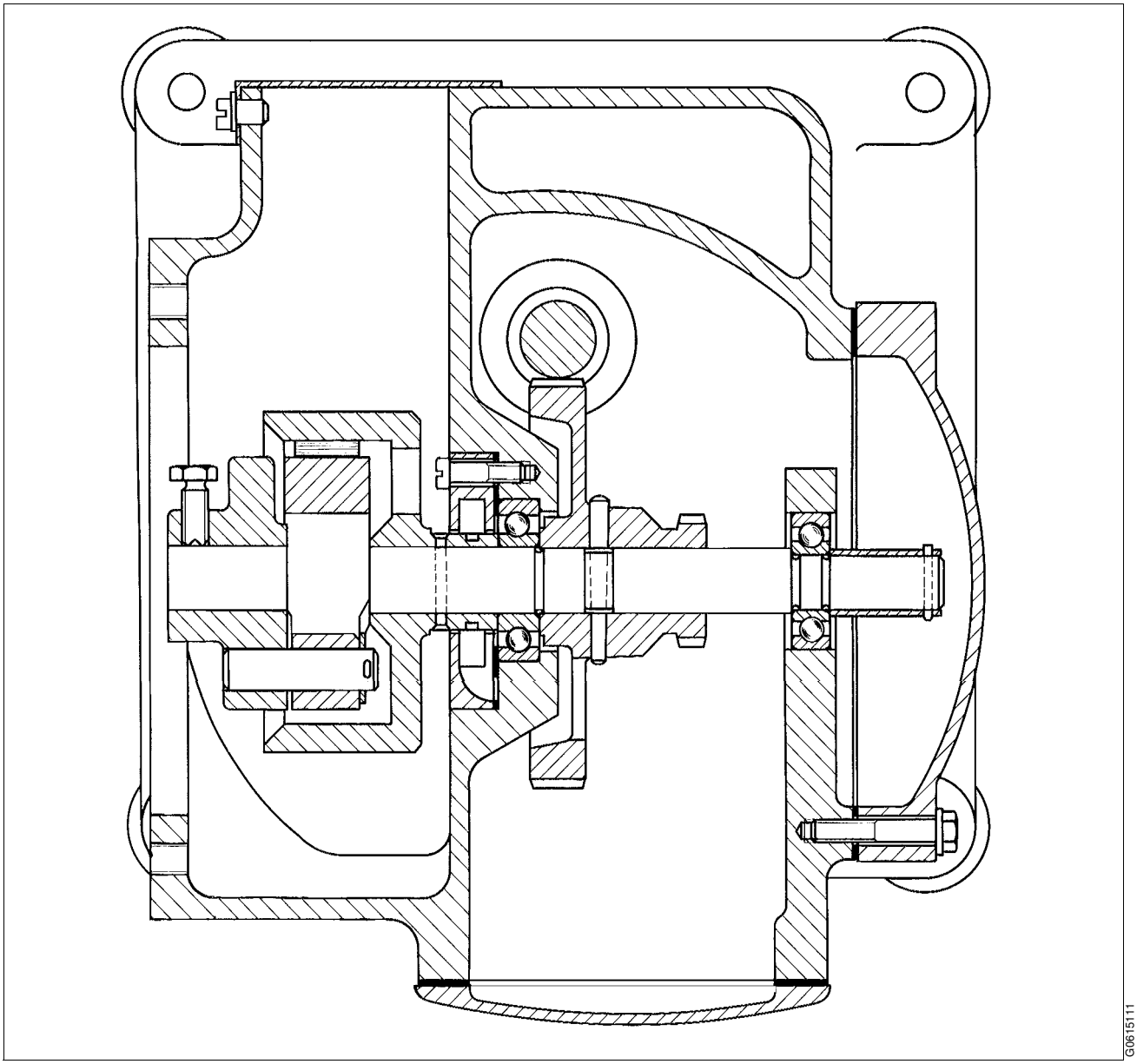

Horizontal driving device

8.10.3 Cross-section, purifier bowl

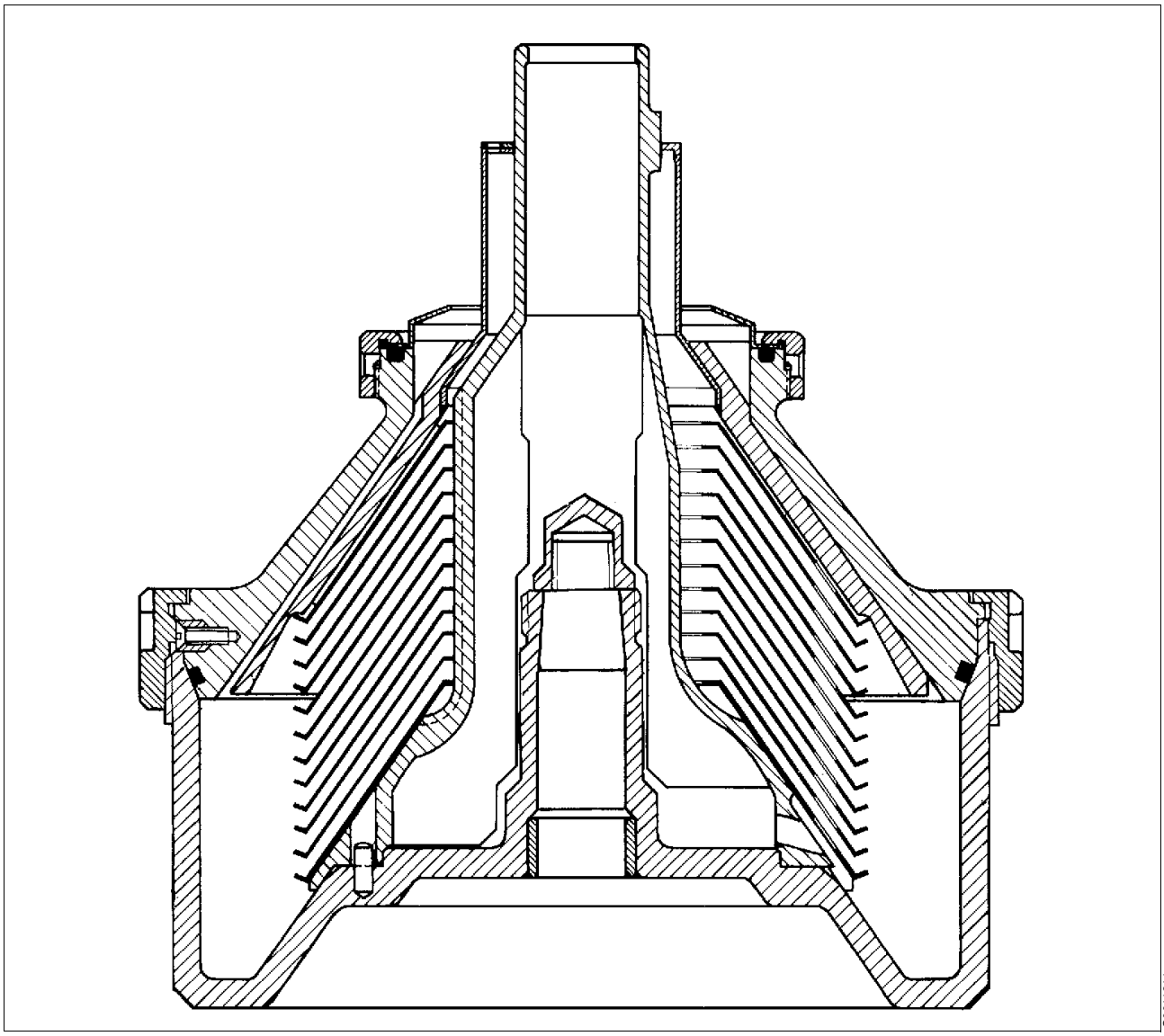

Purifier bowl

8.10.4 Cross-section, clarifier bowl

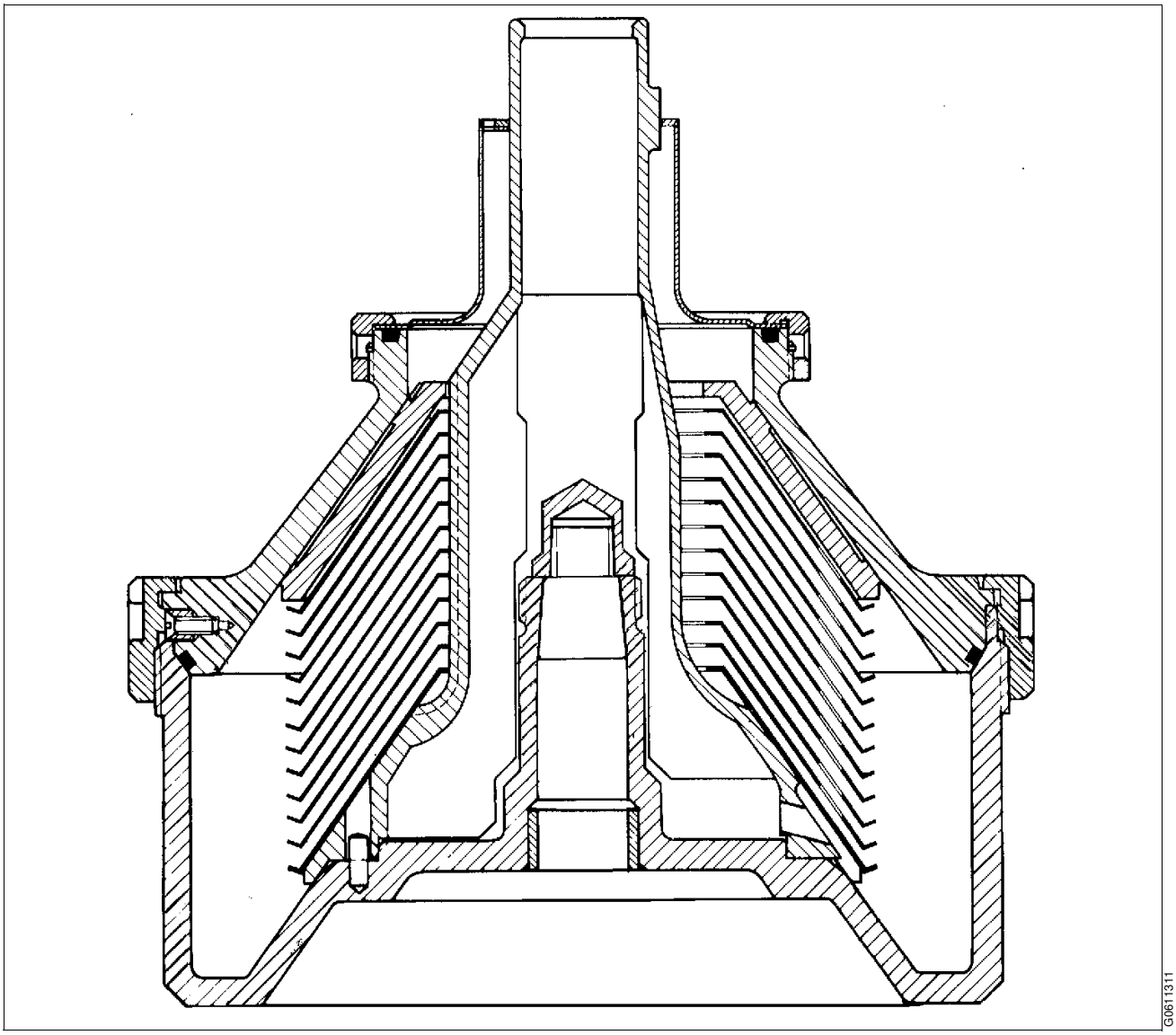

Clarifier bowl

8.10.5 Cross-section, pump

.

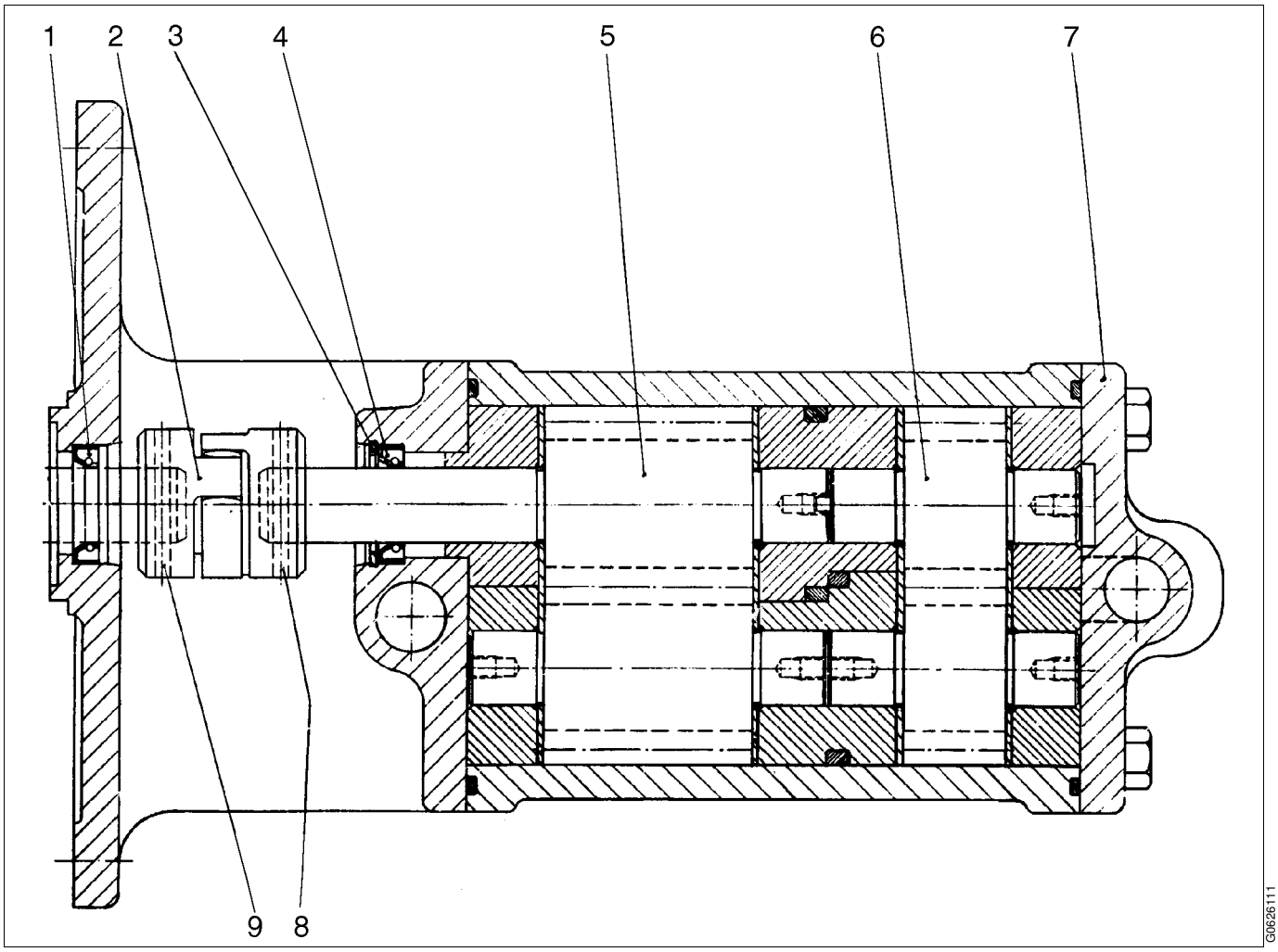

1. *Sealing ring*
2. *Coupling*
3. *Retaining ring*
4. *Sealing ring*
5. *Pump impeller*
6. *Pump impeller*
7. *Shield*
8. *Slotted tubular spring pin*
9. *Slotted tubular spring pin*

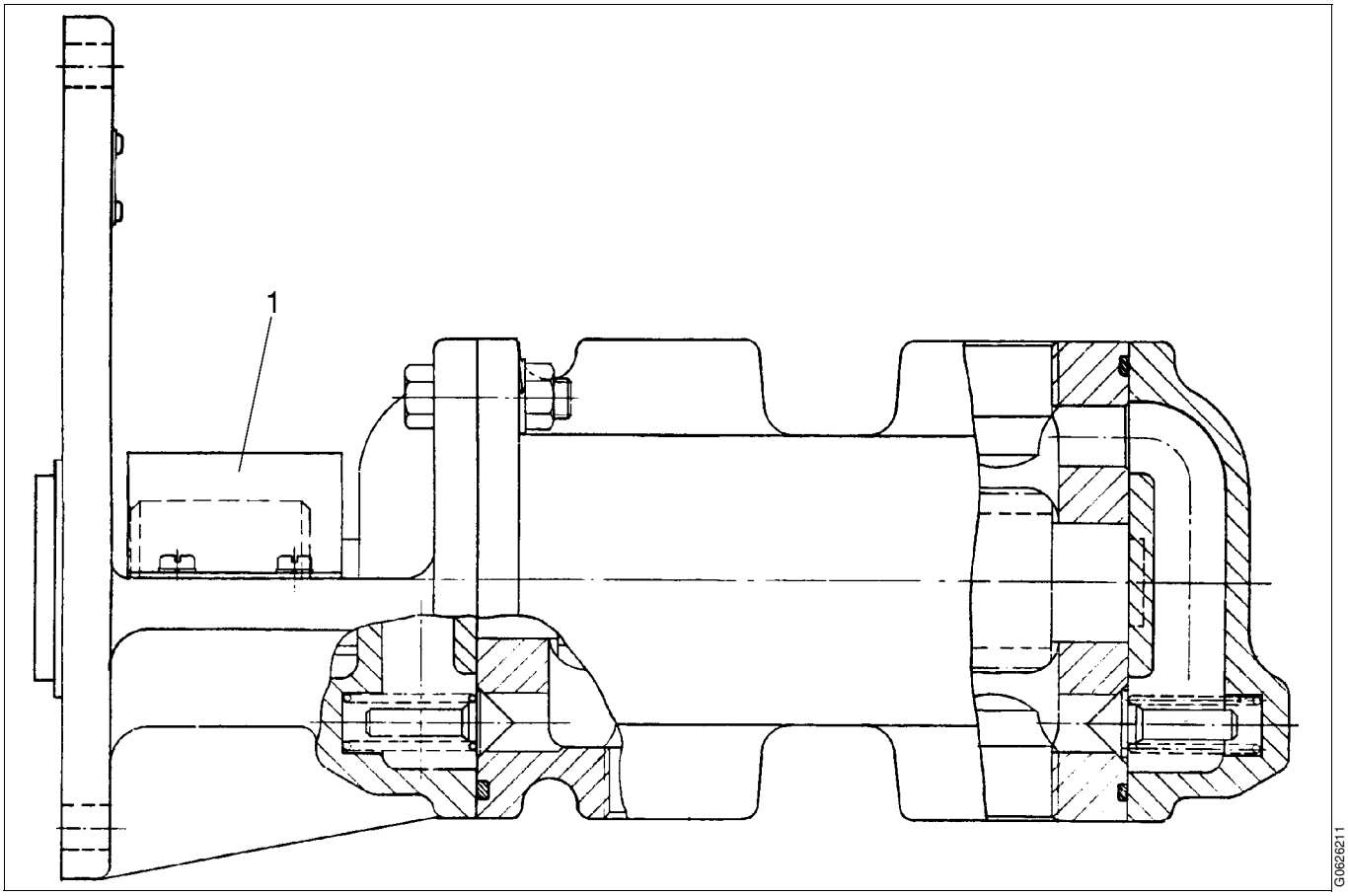

1. Coupling guard

8.10.6 Cross-section, water inlet device

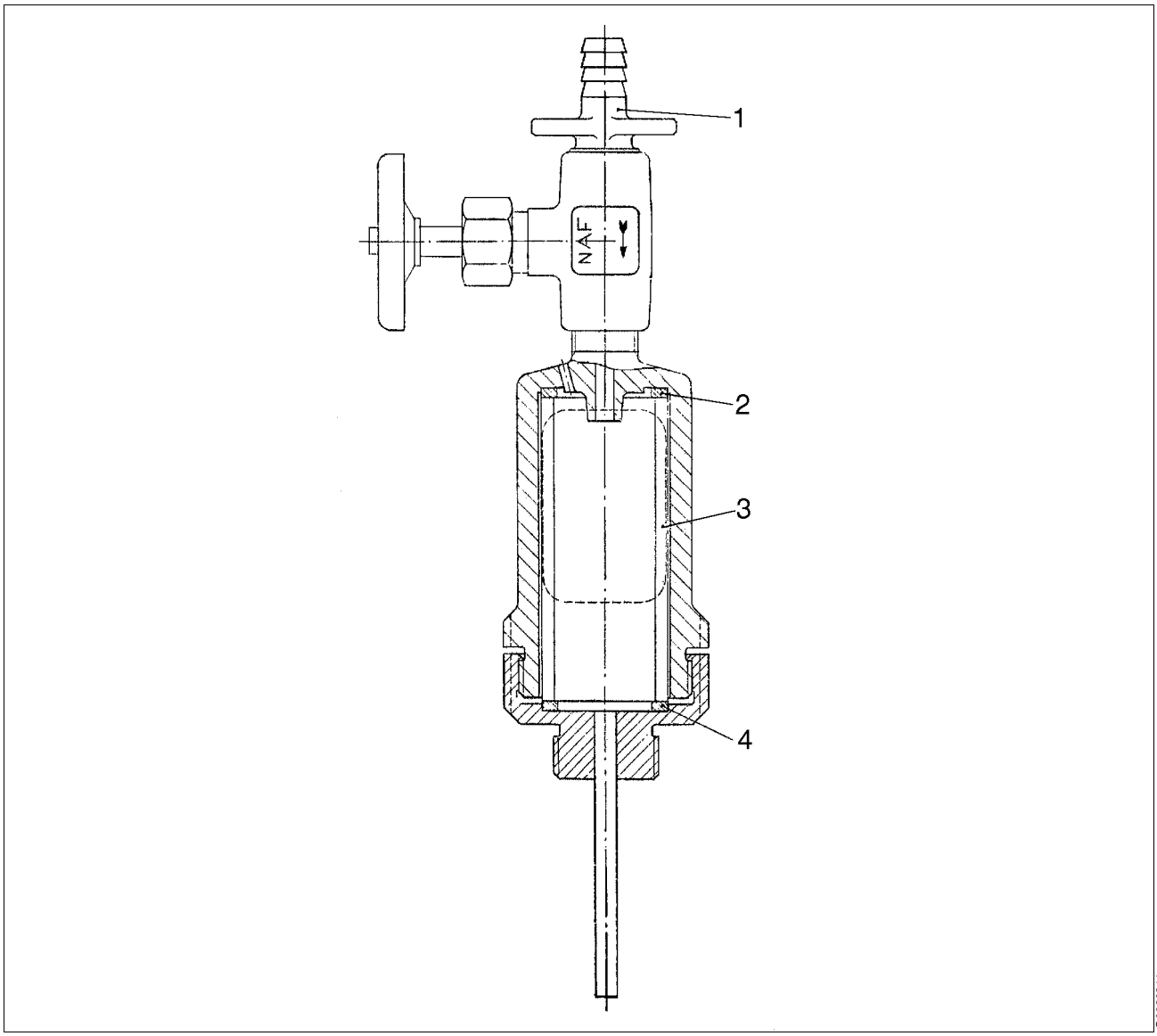

1. *Hose nipple*
2. *Packing*
3. *Sight glass*
4. *Packing*

8.10.7 Machine plates and safety labels

Alfa Laval ref. 558097, rev. 1

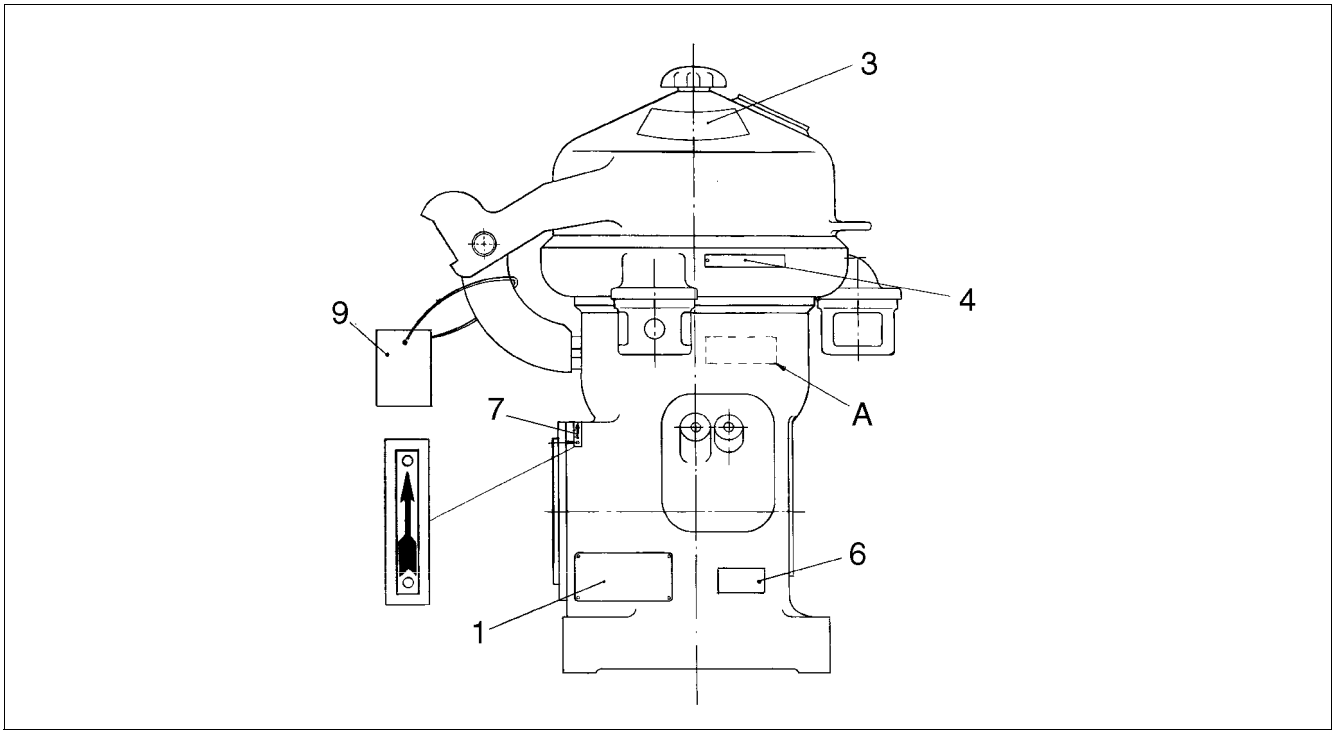

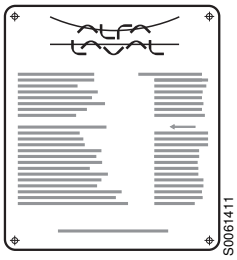

1. Machine plate

Separator

Manufacturing serial No / Year

Product No

Bowl

Max. speed (bowl)

Direction of rotation (bowl)

Speed motor shaft

Frame

El. current frequency

Recommended motor power

Max. density of feed

Max. density of sediment

Process temperature min./max.

3. Safety label

Text on label:

Warning

Read the instruction manuals **before** installation, operation and maintenance. Consider inspection intervals.

Failure to strictly follow instructions can lead to fatal injury.

If excessive vibration occurs, **stop** separator and **keep bowl filled** with liquid during rundown.

Out of balance vibration will become worse if bowl is not full.

Separator must **stop rotating** before **any** dismantling work is started.

S00690N1

4. Name plate

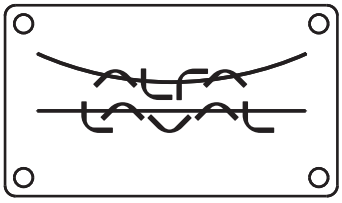

S0063211

6. Power supply frequency

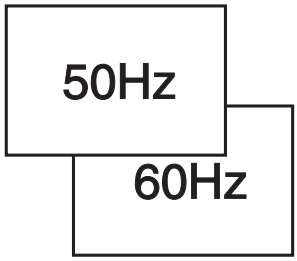

S0063111

7. Arrow

Indicating direction of rotation of horizontal driving device.

S0068811

9. Stop, follow lifting instruction

This transport label is not permanently fixed to the separator.

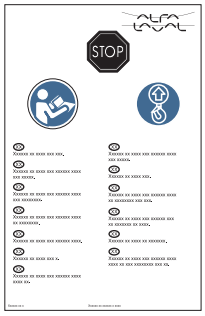

S0069111

8.11 Electric motor

For information regarding motor specifications, see motor plate.

For further information see motor manufacturer's documentation.

NOTE

For complete information about motor variants, please contact your Alfa Laval representative.

8.12 Storage and installation

8.12.1 Storage and transport of goods

Storage

Before storing a separator that has been in operation, make sure to drain any parts containing water, such as Operating water module (if any), Operating water system and Cooling jackets.

Specification

Upon arrival to the store, **check all components and keep them:**

1. Well stored and protected from mechanical damage.
2. Dry and protected from rain and humidity.
3. Organized in the store in such a way that the goods will be easily accessible when installation is about to take place.

A separator can be delivered with different types of protection:

- Fixed on a pallet.

  The separator must be stored in a storage room well protected from mechanical damage and also dry and protected from rain and humidity.

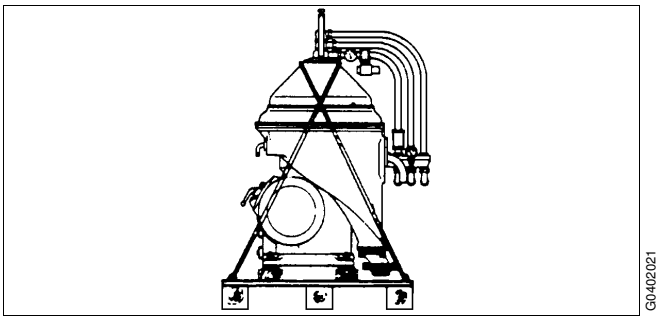

Fixed on a pallet

- In a wooden box which is not water tight.

  The separator must be stored dry and protected from rain and humidity.

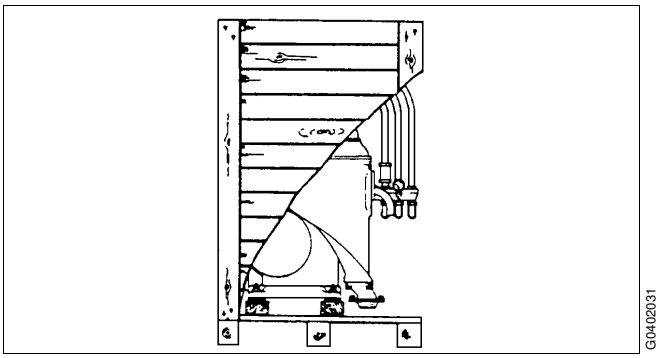

In a wooden box which is not water tight

- In a special water-resistant box for outdoor storage.

  The separator and its parts have been treated with an anti-corrosion agent. Once the box has been opened, store dry and protected from rain and humidity.

  The packaging for outdoor storage is only to special order.

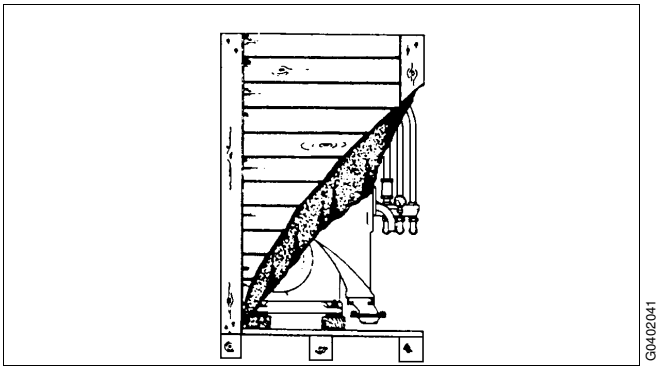

In a special water-resistant box for outdoor storage

Transport

Specification

- During transport of the separator, the frame hood and bowl **must always be removed from the machine.**
- When lifting a separator it must always be **hung securely**. See chapter "5.7 Lifting instructions" on page 83.

WARNING

Crush hazard

Use correct lifting tools and follow lifting instructions.

- During erection, all inlets and outlets to separators and accessories must be covered to be protected from dirt and dust.

8.12.2 Planning and installation

Introduction

The requirements for one or more separators can be established by consulting the following documents.

- Basic size drawing
- Connection list
- Interface description
- Interconnection drawing
- Foundation drawing
- Lifting drawing

These are included in this chapter “8 Technical reference” on page 131.

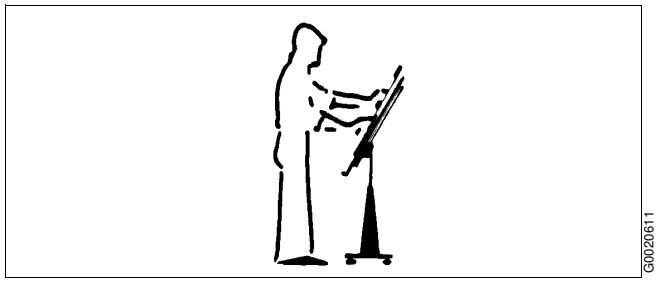

Check the drawings when planning the installation

Important measurements

Important measurements are the minimum lifting height for lifting tackle, shortest distance between driving motor and wall, free passage for dismantling and assembly, maintenance and operation.

Plan your installation with sufficient room for the controls and operation so that instruments are easily visible. Valves and controls must be within convenient reach. Pay attention to space requirements for maintenance work, work benches, dismantled machine parts or for a service trolley.

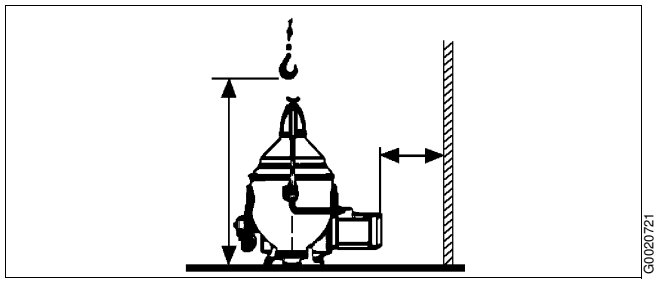

Suitable space must be obtained for the maintenance work

Space for separator

The separator shall be placed in such a way that suitable space for maintenance and repair is obtained.

Specification

- See the "Basic size drawings" on pages 141, 142 and 143 for the service space required with the separator installed.

Recommendation

- The spanner for the large lock ring should have sufficient space to make a complete turn without hitting any of the ancillary equipment surrounding the separator.

Lifting height for transport of bowl

Specification

- A minimum height is required to lift the bowl, bowl parts and the bowl spindle.

Recommendation

- When two or more separators are installed, the lifting height may have to be increased to enable parts from one separator to be lifted and moved over an adjoining assembled separator.

NOTE

Remove the separator bowl before lifting.

WARNING

Crush hazard

Use correct lifting tools and follow lifting instructions.

Do not work under a hanging load.

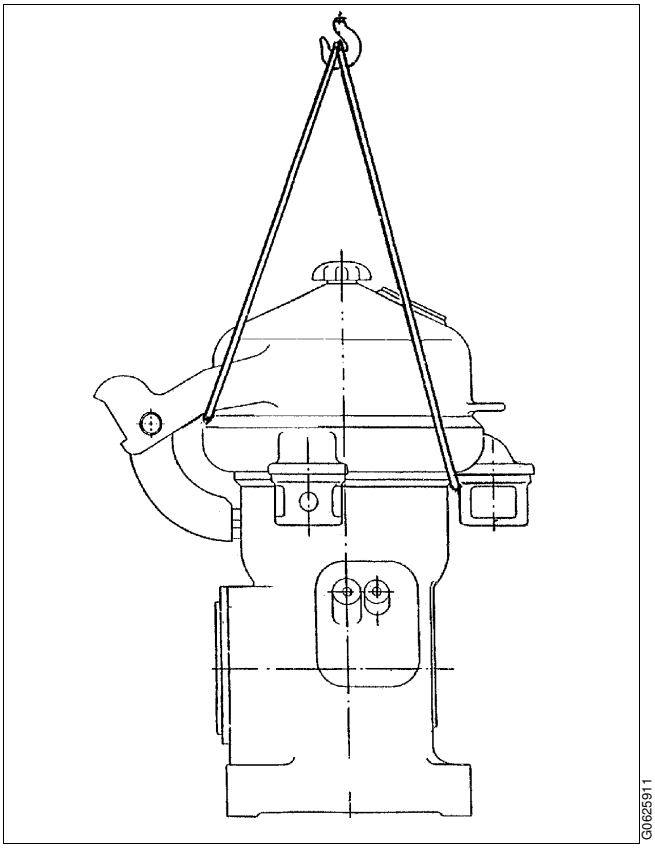

Do not lift the separator in any other way

Space for oil changing

Specification

- The plug for gearbox oil draining must not be blocked by floor plate arrangement, etc.

Recommendation

- It should be possible to place a portable collecting tray under the gearbox drain plug for changing oil.

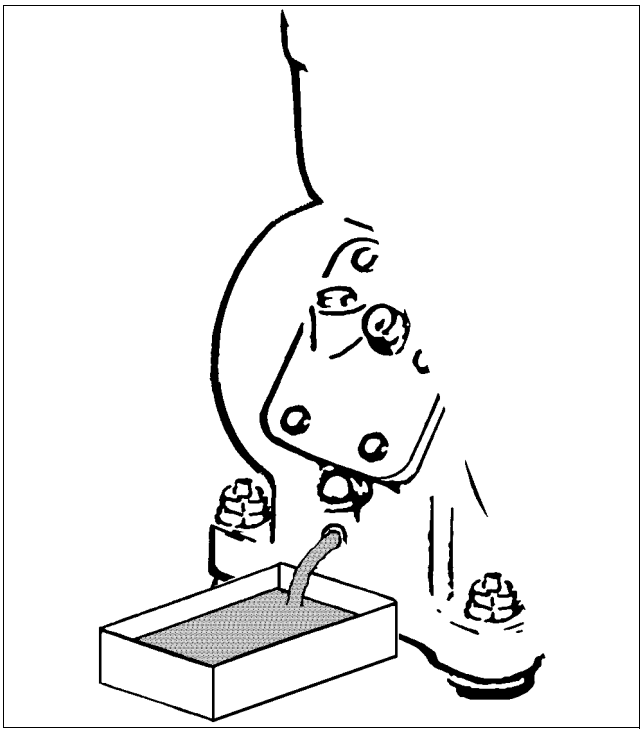

Place the separator in such way that makes the oil change easy

8.12.3 Foundations

Specification

- The separator should be installed at floor level, see the "Basic size drawings" on page 143, 142 and 141.
- The separator must be installed on a strong and rigid foundation to reduce the influence of vibrations from adjacent machinery.

Fit the separator frame on the foundation as follows:

1. Place the separator without vibration dampers (3) in position.
2. Check that the bolts do not press against the edges of the holes, otherwise the elasticity of the mounting of the separator frame will be impeded.
3. Check that the separator frame is horizontal and that all feet rest on the base plane.
4. Fit height adjusting washers required.
5. Lift the separator, fit the vibration dampers (3), lower and check that the bolts do not press against the edges of the holes.
6. Fit the nut (2) and tighten with **16 Nm**. Hold the nut firmly and secure with the lock nut (1). Repeat for the other frame feet.

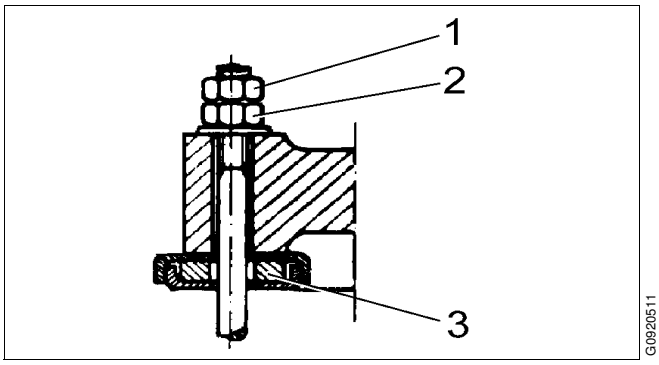

Frame foot with vibration damper

1. *Lock nut*
2. *Nut*
3. *Vibration damper*